[redacted] 2638

TM9-1984

WAR DEPARTMENT

TECHNICAL MANUAL

DISPOSAL OF AMERICAN AND ALLIED BOMBS AND FUSES

November 12, 1942

2638

TM 9-1984

TECHNICAL MANUAL

DISPOSAL OF AMERICAN AND ALLIED BOMBS AND FUZES

Prepared under direction of the Chief of Ordnance

2638

Register No. ______

1. The Ordnance Bomb Disposal School, Aberdeen Proving Ground, Maryland is designated as the office of record to which returns will be made for this document, pursuant to paragraph 24, AR 380-5.

2. Accountable officers will report possession of this manual to the office of record on June 30 and December 31 of each year (par. 27, AR 380-5) and will report transfer thereof to another custodian by certificate of transfer (par. 28, AR 380-5).

3. Loss or destruction of the manual due to the exigencies of war or otherwise should be reported to the office of record.

(A. G. 062.11 (11-10-42).)

By ORDER OF THE SECRETARY OF WAR:

G.C. MARSHALL
Chief of Staff.

OFFICIAL:

J.A. ULIO,
Major General,
The Adjutant General.

WAR DEPARTMENT,
Washington, November 12, 1942.

TM 9-1984. The purpose of this Manual is to provide in convenient form a text on disposal of American and Allied Bombs and Fuses. The information contained herein includes description, means of identification, operation, and disposal methods of American and Allied Bombs and Fuses. From time to time addenda will be published for inclusion in this Manual.

(A.G. 062.11 (11-10-42).)

By ORDER OF THE SECRETARY OF WAR:

G.C. MARSHALL,
Chief of Staff.

FFICIAL:

J.A. ULIO,
Major General,
The Adjutant General.

INDEX

PART I

U.S. BOMBS PAGE NO.

A. ARMY BOMBS

1. Mark Series

General Purpose Bombs

100 lb. Mk I M IV....................11
300 lb. Mk I M II....................11
600 lb. Mk I M II....................13
1100 lb. Mk III M I....................13
2000 lb. Mk I M III....................15
2000 lb. Mk I M IV....................15
2000 lb. Mk I M V....................15

2. M Series

General Purpose Bombs

100 lb. M 30....................17
300 lb. M 31....................19
600 lb. M 32....................21
1100 lb. M 33....................23
2000 lb. M 34....................25

Armor Piercing Bombs

600 lb. M 62....................27
800 lb. M 61....................27
900 lb. M 60....................29
1000 lb. M 52....................29

Fragmentation Bombs

30 lb. M 5....................30

Chemical Bombs

Introduction....................31
30 lb. M 46 A2....................33
100 lb. M 47 A1....................33
115 lb. M 70....................35
10 lb. M 67....................37
6 lb. M 69....................37

Photoflash Bombs and Signals

Photo 23 lb. M 23 A1....................39
Photo 50 lb. M 46....................39
Signal Cluster Flare....................41

B. NAVY BOMBS

Fragmentation Bombs

30 lb. Mk V Mod 1....................45
30 lb. Mk V Mod 2....................45
30 lb. Mk V Mod 3....................45

General Purpose Bombs

100 lb. Mk I Mods 2 & 3....................47
100 lb. Mk IV Mods 1 & 4....................47
500 lb. Mk III Mod 1....................49
500 lb. Mk IX....................49
500 lb. Mk XII Mods 1 & 2....................49
1000 lb. Mk XIII Mods 1 & 2....................51
1000 lb. Mk V....................51
1000 lb. Mk IX....................51

2638

B. NAVY BOMBS (CONT'D) PAGE NO.

Flares
Mk 4....................................52
Mk 5....................................55
Mk 6....................................55

Incendiary Bombs
100 lb. Mk I............................57
100 lb. Mk XXVIII.......................57

Drift Signal
3 lb....................................59

Aircraft Mines
1000 lb. Mk XIII........................61
1600 lb. Mk XII Mod 1...................61

Anti-Aircraft Bombs
3 lb. Type C (Mk XXXII..................63
5 lb. Mk XXXIV..........................63

Practice Bombs
3 lb. Mks III, IV, & V Mod 1............65
3 lb. Mk XXIII..........................65
13 lb. Mk XIX Mod 1.....................65
100 lb. Mk VII..........................67
100 lb. Mk XV...........................67
500 lb. Mk V............................69
500 lb. Mk XI...........................69
500 lb. Mk XXI..........................69
1000 lb. Mk VII.........................71
1000 lb. Mk XXII........................71

Depth Bombs
Introduction............................73
650 lb. Mk 29...........................75
650 lb. Mk 37...........................75
650 lb. Mk 38...........................77
700 lb. Mk 49...........................77
(See AN Bombs for other Depth Bombs)

Gas Bombs
Mk 42...................................79

A.S. Projector Charges
65 lb. A.S. Projector Bomb-Mk 5 & 7....81
65 lb. A.S. Projector Bomb-Mk 6 & 8....83

C. ARMY- NAVY AND ARMY - NAVY (G.P.) BOMBS

Fragmentation Bombs.
20 lb. AN M 40..........................87
20 lb. AN M 41..........................87

Incendiary Bombs
2 lb. AN M 52...........................89
4 lb. AN M 54...........................91
4 lb. AN M 54X..........................91
4 lb. AN M 50 A1........................91
4 lb. AN M 50 A1X.......................91

C. ARMY-NAVY AND ARMY-NAVY (G.P.) BOMBS PAGE NO.

H.E. Demolition Bombs
100 lb. AN M 30............................93
250 lb. AN M 57............................95
500 lb. AN M 43............................97
500 lb. AN M 64............................97
1000 lb. AN M 44...........................99
1000 lb. AN M 65...........................99
2000 lb. AN M 66...........................101
2000 lb. AN M 34...........................101
4000 lb. AN M 56...........................103

Semi-Armor Piercing Bombs
500 lb. AN M 58............................105
1000 lb. AN M 59...........................105

Armor- Piercing Bombs
1000 lb. AN Mk 33..........................107
1600 lb. AN Mk 1...........................109

Depth Bombs
Introduction...............................111
325 lb. AN Mk 17-2.........................113
350 lb. AN Mk 44...........................113
325 lb. AN Mk 41...........................115
350 lb. AN Mk 47...........................115
(See Navy Depth Bombs For Others)

FLARES
AN M 26....................................117

PART II

U.S. BOMB FUZES TYPE PAGE NO.

A. ARMY FUZES

M 100 Series (Introduction)................119
M 100.....................tail.........121
AN M 100 A1...............tail.........121
AN M 100 A2...............tail.........121
M 101.....................tail.........121
AN M 101 A1...............tail.........121
AN M 101 A2...............tail.........121
M 102.....................tail.........121
AN M 102 A1...............tail.........121
An M 102 A2...............tail.........121
M 14 Primer Detonator......................123
M 103.....................nose.........125
AN M 103..................nose.........125
M 104.....................nose.........127
M 105.....................nose.........129
M 106.....................tail.........131

PART

U.S. BOMBS

2638

A. ARMY FUZES (CONT'D)	TYPE	PAGE NO.
M 106 A1	tail	131
M 106 A2	tail	131
M 108	nose	133
M 109	nose	127
M 110	nose	135
AN M 110 A1	nose	135
M 111	nose	137
AN M 111 A1	nose	137
AN M 111 A2	nose	137
M 112	tail	139
M 113	tail	139
M 114	tail	139
M 115	tail	141
M 116	tail	141
M 117	tail	141
M 16 Primer Detonator		143
M 120	nose	145
M 123	tail	147
M 124	tail	147
M 125	tail	147
M 126	nose	148

B. NAVY FUZES		
Mk 131	nose	151
Mk 135	nose	153
Mk 136	nose	151
Mk 137	nose	155
Mk 139	nose	157
Mk 140	nose	159
Mk 19 Daisy Cutter	nose	163
AN Mk 219	nose	161
Mk 221	nose	164
Mk 223	tail	167
AN Mk 224	Hydrostatic	169
Mk 227	nose	171
AN Mk 228	tail	173
Mk 229	Hydrostatic	175
AN Mk 230	Hydrostatic	175
Mk 232	nose	177
Mk 233	nose	179
Mk 234	Hydrostatic	181
LDT-1	tail	183
ADN-1	nose	185

U.S. ARMY AND NAVY BOMBS

INTRODUCTION

ARMY:

Prior to 1939, the Army used the Mark series of bombs. This particular series of bombs was not satisfactory for war use, and was abandoned. There may be a few of these bombs in the field, being used only for target practice.

The M series was developed in 1939 to replace the old Mark series. This series was modeled after the Mark I 2000 lb. bomb, e.i. one piece of seamless steel tubing. At first these bombs were forged, however, the casting technique is so improved that they are now cast.

The M series has the M-102 booster adapter in the tail which is filled with tetryl. The M-104 auxiliary booster is a bakelite tube filled with tetryl. In all M series bombs, except the 100 lb. M-30, the M-104 auxiliary booster is inserted beneath the fuse cavity. In the 100 lb. M-30, only the nose cavity has the M-104 auxiliary booster.

In pre-war days all of these bombs were filled with 100% T.N.T. However, due to a shortage of T.N.T. after the war began, the bombs were filled with 50-50 Amatol with pure T.N.T. fuse pocket surrounds. This arrangement is used to prevent the Amatol from exuding. Recently the T.N.T. resources have been developed to the point that all bombs can again be filled with 100% T.N.T. Bombs so filled should be available soon.

The M series of bombs are:

SIZE.	DESIGNATION.
100 lb.	M-30
300 lb.	M-31
600 lb.	M-32
1100 lb.	M-33
2000 lb.	M-34

AN-M series.

In order to standardise the American Army bombs to fit the bomb bays of British and American Navy planes, several minor changes were necessary. The 300 lb., 600 lb., and 1100 lb. bombs were reduced in size to 250 lb., 500 lb., and 1000 lb. respectively. A single suspension lug was placed diametrically opposite of the other two lugs and at the center of gravity. The base filling plug was changed from female to male. Other than these changes the bombs remained essentially the same as in the M series.

The AN-M series bombs are as follows:

SIZE	DESIGNATION
100 lb.	AN-M-30
250 lb.	AN-M-57
500 lb.	AN-M-43
1000 lb.	AN-M-44
2000 lb.	AN-M-34

AN-M (G.P.) series.

This series of bombs is the same as the AN-M series except for the arrangement of the tail fuse pocket. The M-115 booster adapter was used instead of the M-102. The M-115 is larger in diameter so that it will receive the AN-Mk-230 hydrostatic fuze and can be used on Coastal Patrol Missions. The booster adapter is equipped with a sleeve. When this sleeve is screwed into the M-115, the regular mission AN tail fuzes may be used. In order to insert, the AN-Mk-230 fuze this sleeve must be removed.

The M-115 booster adapter is used only in the 500, 1000 and 2000 lb. bombs because the smaller bombs are too small to have any appreciable underwater effect.

The AN-M (G.P.) series bombs are as follows.

SIZE	DESIGNATIONS.
500 lb.	AN-M-64
1000 lb.	AN-M-65
2000 lb.	AN-M-66

U.S. NAVY:

Under the standardization program the Navy bombs were discontinued except for the 1600 lb. A.P. bomb and a few depth bombs. The Navy bombs were of a design similar to the Army bombs. All Navy bombs were filled with 100% T.N.T.

BOMB DATA [redacted] COPY NO.

FILE NO.: 1154.B1

NATIONALITY: U.S. ARMY	INFORMATION DATE: Sept. 1943
SIZE: 100 lb. Mk. I M IV 300 lb. Mk. I M II	TYPE: Army Demolition - H.E. (Mark Series)
TARGET: Ammunition dumps, railway engines and cars, all types of construction except skyscrapers, and airplanes on ground.	FUZES: NOSE: M 105 TAIL: M 106

OBSOLETE

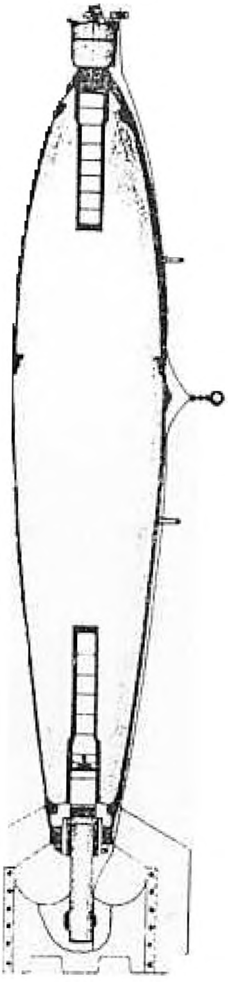

100 lb. Mk. I M IV

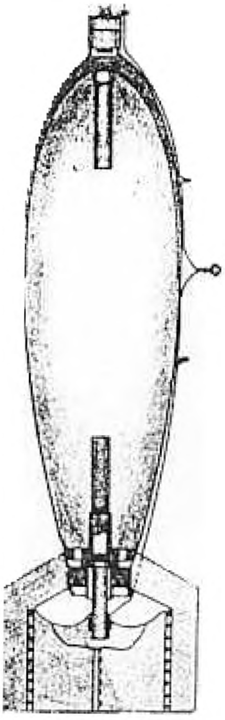

300 lb. Mk. I M II

26

[redacted]

COPY NO. ________

BOMB DATA

FILE NO.: 1154.B1

NATIONALITY: U.S. ARMY	INFORMATION DATE: September 1943
SIZE: 100 lb. Mk. I M IV 300 lb. Mk. I M II	TYPE: Army Demolition - H.E. (Mark Series)
TARGET: Ammunition dumps, railway engines and cars, all types of construction except skyscrapers, and airplanes on ground.	FUZES: NOSE: M 105 TAIL: M 106

	DATA	100 lb. Mk. I M IV	300 lb. Mk. I M II
1	OVERALL LENGTH	47.2 inches	51.2 inches
2	LENGTH OF BODY	39.5 inches	40.6 inches
3	DIAMETER OF BODY	7.9 inches	12.2 inches
4	THICKNESS OF WALL	0.16 inch	0.12 inch
5	MATERIAL OF WALL	Steel	Steel
6	CONSTRUCTION OF BODY	This bomb is formed from three cast steel sections of the body welded together. The body is streamlined by tapering each section towards the rear of the bomb.	
7	TYPE OF SUSPENSION	These bombs are always held horizontally.	
8	CONSTRUCTION OF SUSPENSION LUG	The Mark Series bombs have two eyebolts welded to body along longitudinal axis of the bomb. The eyebolts are formed from bar steel, shaped in the form of a U and then welded to the bomb body.	
9	COLOR & MARKINGS ON BOMB AND TAIL	While these bombs are no longer manufactured they still may be found in the field. Prior to March 11, 1942 these bombs would have been painted yellow all over with black manufacturer's markings but since that date they will be painted olive-drab with a one inch yellow band around the nose and extreme rear of the bomb and a 1/4 inch band around the center of gravity.	
10	LENGTH OF TAIL	8.5 inches	12.0 inches
11	WIDTH OF TAIL	11.0 inches	15.0 inches
12	MATERIAL OF TAIL	Sheet steel.	Sheet steel.
13	CONSTRUCTION OF TAIL	This type of tail consists of the following parts: 1) A cast steel sleeve secured to the body of the bomb by a fin locking nut; 2) Four fins or vanes; 3) Internal box-type struts. One vane and one strut are pressed from one piece of metal and the four pieces are welded together and to the sleeve.	
14	WEIGHT OF TAIL	2.6 lbs.	6.1 lbs.
15	TYPE OF FILLING	Cast T.N.T.	Cast T.N.T.
16	WEIGHT OF FILLING	65.0 lbs.	148.0 lbs.
17	TOTAL WEIGHT OF BOMB	119.4 lbs.	285.9 lbs.
18	CHARGE / WEIGHT RATIO	54.5 %	52.0 %

[redacted]

COPY NO.

BOMB DAT — FILE NO.: 1156.B1

NATIONALITY: U.S. ARMY	INFORMATION DATE: September 1943
SIZE: 600 lb. Mk. I M II 1100 lb. Mk. III M I	TYPE: Army Demolition - H.E. (Mark Series)
TARGET: Ammunition dumps, railway engines and cars, all types of construction except skyscrapers, and airplanes on ground.	FUZES: NOSE: M 105 TAIL: M 106

OBSOLETE

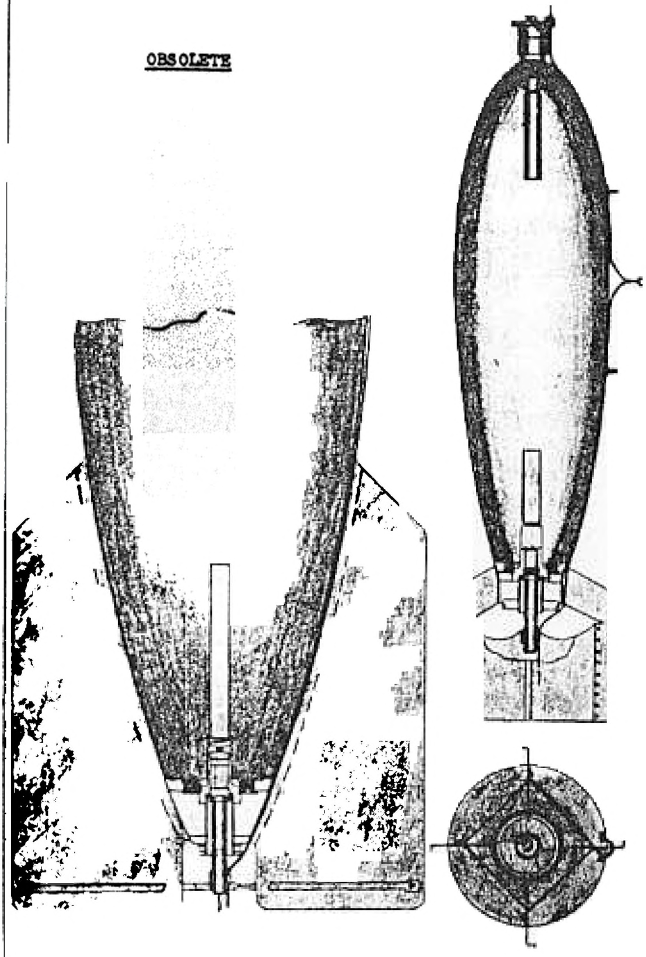

600 lb.

PART I

SECTION A

ARMY BOMBS

[redacted]

COPY NO. —

BOMB DATA FILE NO.: 1156.B2

NATIONALITY: U.S. ARMY	INFORMATION DATE: September 1943
SIZE: 2000 lb. Mk. I M III 2000 lb. Mk. I M IV 2000 lb. Mk. I M V	TYPE: Army Demolition - H.E. (Mark Series)
TARGET: General Bombardment.	FUZES: NOSE: M 105 TAIL: M 106 M 106 Long

OBSOLETE

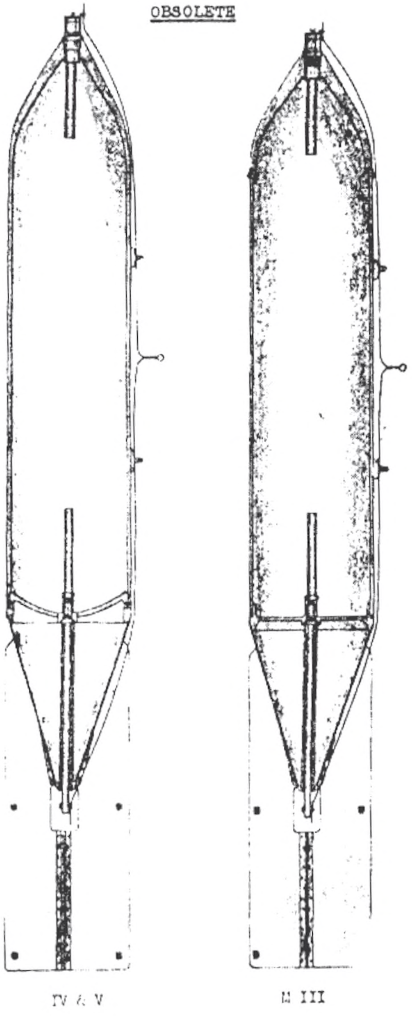

[redacted]

COPY NO. 2638

BOMB DATA

FILE NO.: 1156.B2

NATIONALITY: U.S. ARMY	INFORMATION DATE: September 1943
SIZE: 2000 lb. Mk. I M III 2000 lb. Mk. I M IV 2000 lb. Mk. I M V	TYPE: Army Demolition - H.E. (Mark Series)
TARGET: General Bombardment.	FUZES: NOSE: M 105 TAIL: M 106 Long M 106

	DATA	2000 lb. Mk. I, M III and M IV	2000 lb. M V
1	OVERALL LENGTH	135.8 inches	135.8 inches
2	LENGTH OF BODY	97.0 inches	97.0 inches
3	DIAMETER OF BODY	18.5 inches	18.5 inches
4	THICKNESS OF WALL	0.50 inch	0.50 inch
5	MATERIAL OF WALL	Steel	Steel
6	CONSTRUCTION OF BODY	Models III and IV of this bomb are formed from seamless steel tubing to which the cast steel nose is rivetted and rear of the bomb is not tapered. Model III has a flat base plate welded to body. Model IV has a dome-shaped base plate which screws into rear of bomb case.	Model V is formed from seamless steel tubing, the nose being swaged to necessary contour. The base plate on this bomb is same as for Model IV.
7	TYPE OF SUSPENSION	These bombs are always held horizontally.	
8	CONSTRUCTION OF SUSPENSION LUG	The 2000 lb. Mk. Series bombs have two eyebolts on plates which are secured to body by means of cap screws.	
9	COLOR & MARKINGS ON BOMB AND TAIL	While this bomb is no longer manufactured it may still be found in the field. Prior to March 11, 1942 these bombs would have been painted yellow all over with black manufacturer's markings but since that date they will be painted olive-drab with a one inch yellow band around the nose and extreme rear of the bomb and a 1/4 inch band around the center of gravity.	
10	LENGTH OF TAIL	49.2 inches	49.2 inches
11	WIDTH OF TAIL	26.1 inches	26.1 inches
12	MATERIAL OF TAIL	Sheet steel with cast steel tail cone.	
13	CONSTRUCTION OF TAIL	The tail for these bombs consists of a tail cone to which four vanes are rivetted, the vanes being rivetted together beyond the tail cone. Two sets of external bar struts reinforce the vanes. The cone is secured to a flange on the base plate of the bomb.	
14	WEIGHT OF TAIL	140.0 lbs.	140.0 lbs.
15	TYPE OF FILLING	Cast T.N.T.	Cast T.N.T.
16	WEIGHT OF FILLING	960.0 lbs.	960.0 lbs.
17	TOTAL WEIGHT OF BOMB	1920.0 lbs.	1830.0 lbs.
18	CHARGE / WEIGHT RATIO	50.0 %	52.4 %

[redacted]

BOMB DATA FILE NO. COPY NO.

NATIONALITY: U.S. Army	INFORMATION DATE: Sept. 1943
DESIGNATION: 100 lb. M-30	TYPE: G.P. H.E. Bombs (M series)

TARGETS: Ammunition dumps, railway engines and cars, all types of construction except skyscrapers, and airplanes on ground.

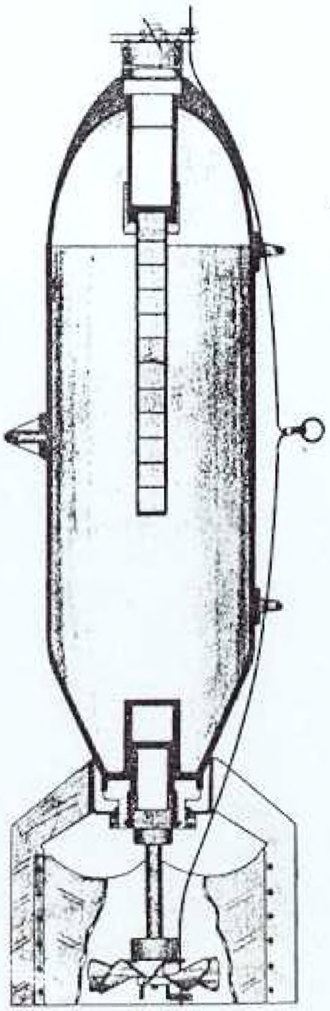

2638

[redacted]

COPY NO ________

BOMB DATA FILE NO.: 1156.B1

NATIONALITY: U.S., ARMY	INFORMATION DATE: September 1943
SIZE: 600 lb. Mk. I M II 1100 lb. Mk. III M I	TYPE: Army Demolition - H.E. (Mark Series)
TARGET: Ammunition dumps, railway engines and cars, all types of construction except skyscrapers, and airplanes on ground.	FUZES: NOSE: M 105 TAIL: M 106

	DATA	600 lb. Mk. I M II	1100 lb. Mk. III M I
1	OVERALL LENGTH	63.0 inches	68.5 inches
2	LENGTH OF BODY	52.2 inches	61.6 inches
3	DIAMETER OF BODY	16.53 inches	20.8 inches
4	THICKNESS OF WALL	0.2 inch	0.15 inch
5	MATERIAL OF WALL	Steel	Steel
6	CONSTRUCTION OF BODY	This bomb is formed from three cast steel sections of the body welded together. The body is streamlined by tapering each section towards the rear of the bomb.	
7	TYPE OF SUSPENSION	These bombs are always held horizontally.	
8	CONSTRUCTION OF SUSPENSION LUG	The Mark Series bombs have two eyebolts welded to body along longitudinal axis of the bomb. The eyebolts are formed from bar steel, shaped in the form of a U and then welded to the bomb body.	
9	COLOR & MARKINGS ON BOMB AND TAIL	While these bombs are no longer manufactured they still may be found in the field. Prior to March 11, 1942 these bombs would have been painted yellow all over with black manufacturer's markings but since that date they will be painted olive-drab with a one inch yellow band around the nose and extreme rear of the bomb and a 1/4 inch band around the center of gravity.	
10	LENGTH OF TAIL	14.0 inches	33.5 inches
11	WIDTH OF TAIL	20.5 inches	28.5 inches
12	MATERIAL OF TAIL	Sheet steel.	Sheet steel.
13	CONSTRUCTION OF TAIL	A cast steel sleeve secured to the body of the bomb by a fin locking nut; four fins or vanes; internal box-type struts. One vane and one strut are pressed from one piece of metal and the four pieces are welded together and to the sleeve.	"
14	WEIGHT OF TAIL	5.0 lbs.	55.0 lbs.
	TYPE OF FILLING	Cast T.N.T.	Cast T.N.T.
16	WEIGHT OF FILLING	355.0 lbs.	650.0 lbs.
17	TOTAL WEIGHT OF BOMB	611.0 lbs.	1175.0 lbs.
18	CHARGE / WEIGHT RATIO	58.0 %	

BOMB DATA [redacted] FILE NO. COPY NO.

NATIONALITY: U.S. Army	INFORMATION DATE: Sept. 1943
DESIGNATION: 100 lb. M-30	TYPE: G.P. H.E. Bombs (M Series)

TARGETS: Ammunition dumps, railway engines and cars, all types of construction except skyscrapers, and airplanes on ground.

FUZES

REGULAR MISSIONS	
Nose:	AN-M 103, M-103
Tail:	AN-M 100A2, AN-M 100A1, M-100
SPECIAL MISSIONS	
Tail:	M-112 - (Masthead bombing from land base only) AN-M 115 (Masthead bombing from carrier or land base). M-123 - (Long time delay fuze against land targets).
Nose:	Where the three above fuzes are used in the tail, the shipping plug should be left in the nose until a nose fuze is developed and supplied to be used on these special missions.

DATA	100 lb. M- 30 Bomb
1. OVERALL LENGTH	36.0 inches
2. LENGTH OF BODY	30.0 inches
3. DIAMETER OF BODY	8.2 inches
4. THICKNESS OF WALL	0.16 inches
5. MATERIAL OF WALL	Steel
6. CONSTRUCTION OF BODY	These bombs may be made by any one of the following methods: 1) From seamless steel tubing in which the nose of the bomb is formed by swaging and the tail by drawing to the necessary diameter; 2) or the case may be forged in one piece; 3) or the bomb may be formed from cast sections welded together. These bombs have male base filling plates.
7. TYPE OF SUSPENSION	These bombs are always held horizontally.
8. CONSTRUCTION OF SUSPENSION LUG	The M Series bombs have two eyebolts welded to body along longitudinal axis of the bomb. The eyebolts are formed from bar steel, shaped in the form of a U and then welded to the bomb body.
9. COLOR & MARKINGS ON BOMB AND TAIL	Prior to March, 11 1942 these bombs would have been painted yellow all over with black manufacturer's markings; but since that date they will be painted olive-drab with a 1 inch yellow band around the nose and

[redacted]

COPY NO.

BOMB DATA FILE NO.

NATIONALITY: U.S. Army	INFORMATION DATE: Sept. 1943	
DESIGNATION 100 lb. M-30	TYPE: G.P.H.E. (M Series)	
9. COLOR & MARKINGS ON BOMB AND TAIL (Cont'd)	extreme rear of the bomb and a 1/4 inch band around the center of gravity.	
10. LENGTH OF TAIL	9.75 inches	
11. WIDTH OF TAIL	11.0 inches	
12. MATERIAL OF TAIL	Sheet Steel.	
13. CONSTRUCTION OF TAIL	This type of tail consists of the following parts; 1) a cast steel sleeve secured to the body of the bomb by a fin locking nut; 2) Four fins or vanes; 3) Internal box-type struts. One vane and one strut are pressed from one piece of metal and the four pieces are welded together and to the sleeve.	
14. WEIGHT OF TAIL	3.5 lbs.	
15. TYPE OF FILLING	A 50/50 Amatol filling with T.N.T. surrounds around the nose and tail booster sleeve to prevent exudation from Amatol during storage. Recently these bombs have been filled with 100% T.N.T. which will be stenciled on the bomb. This bomb contains only one built-in M 104 auxiliary booster (nose) which contains tetryl. The M-102 adapter booster (tetryl) is built in the base plug and receives the tail fuze.	
	<u>50/50 Amatol</u>	<u>T.N.T.</u>
16. WEIGHT OF FILLING	53.3 lbs.	56.6 lbs.
17. TOTAL WEIGHT	98.1 lbs.	100.0 lbs.
18. CHARGE/WEIGHT RATIO	54.6%	56.6%

[redacted]

BOMB DATA — COPY NO. — FILE NO.

NATIONALITY: U.S. Army	INFORMATION DATE: September 1943
SIZE: 300 lb. M 31	TYPE: G.P. H.E. Bombs (M Series)

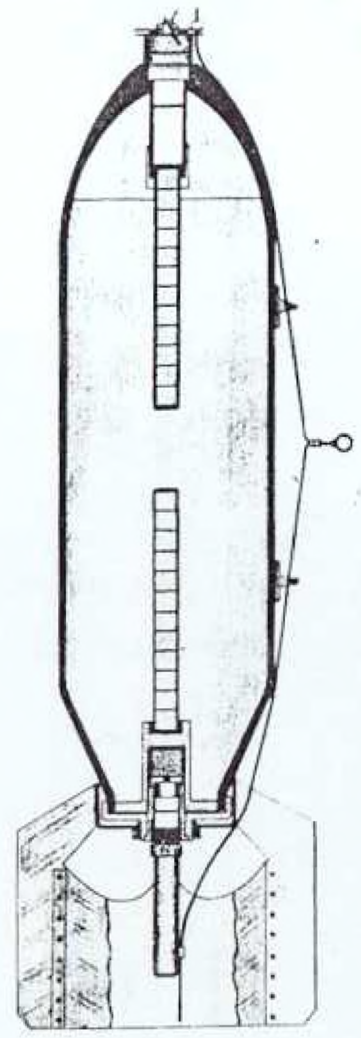

COPY NO.

BOMB DATA [redacted] FILE NO.

NATIONALITY: U.S. Army	INFORMATION DATE: September 1943
SIZE: 300 lb. M 31	TYPE: G.P. H.E. Bombs (M Series)

TARGET: Ammunition dumps, railway engines and cars, all types of construction except skyscrapers and airplanes on ground.

FUZES

REGULAR MISSIONS

Nose:	AN-M 103, M-103
Tail:	AN-M 100A2, AN-M 100A1, M 100

SPECIAL MISSIONS

(1) Masthead bombing:

Nose:	Shipping plug until nose fuze is defeloped and supplied specifically for masthead bombing.
Tail:	M-112 (Land based planes Only) AN-M 115 (Carrier based or land based planes)

(2) Longtime delay fuze:

Nose:	Shipping plug unless specifically provided with suitable fuzes.
Tail:	M - 123

DATA	300# - M-31
1. OVERALL LENGTH	48.6"
2. LENGTH OF BODY	40.2"
3. DIAMETER OF BODY	10.9"
4. THICKNESS OF WALL	0.27"
5. MATERIAL OF WALL	Steel
6. CONSTRUCTION OF BODY	These bombs may be made by any one of the following methods: 1) from seamless steel tubing in which the nose of the bomb is formed by swaging and the tail by drawing to the necessary diameter; 2) or the case may be forged in one piece; 3) or the bomb may be formed from cast sections and welded together. These bombs have male base filling plugs
7. TYPE OF SUSPENSION	These bombs are always held horizontally
8. CONSTRUCTION OF SUSPENSION LUG	The M Series bombs have two eyebolts welded to body along longitudinal axis of the bomb. The eyebolts are formed from bar steel, shaped in the form of a U and then welded to the bomb body.

BOMB DATA [redacted] FILE NO. COPY NO.

NATIONALITY: U.S. Army	INFORMATION DATE: September 1943
SIZE: 300 lb. M 31	TYPE: G.P.H.E. Bombs (M Series)

9. COLOR & MARKINGS ON BOMB AND TAIL Prior to March 11 1942 these bombs would have been painted yellow all over with black manufacturer's markings but since that date they will be painted olive-drab with a one inch yellow band around the nose and extreme rear of the bomb and a 1/4 inch band around the center of gravity.

10. LENGTH OF TAIL	12.1"
11. WIDTH OF TAIL	14.9"
12. MATERIAL OF TAIL	Sheet Steel

13. CONSTRUCTION OF TAIL This type of tail consists of the following parts: 1) a cast steel sleeve secured to the body of the bomb by a fin locking nut; 2) four fins or vanes; 3) Internal box-type struts. One vane and one strut are pressed from one piece of metal and the four pieces are welded together and to the sleeve.

14. WEIGHT OF TAIL	6.0 lbs.

15. TYPE OF FILLING (1) A 50/50 Amatol filling with TNT surrounds the nose and tail booster sleeve to prevent exudation from Amatol during storage.
(2) 100% TNT filling. This bomb contains two built-in M-104 auxiliary boosters (one in the nose and one in tail) - which contains tetryl. The M-102 Adapter booster (tetryl) is built in the base plug and receives the tail fuze.

	50/50 Amatol	T.N.T.
16. WEIGHT OF FILLING	135.5 lbs.	144.0 lbs.
17. TOTAL WEIGHT OF BOMB	263.0 lbs.	270.0 lbs.
18. CHARGE/WEIGHT RATIO	51.5%	53.3%

[redacted]

COPY NO.

BOMB DATA

FILE NO.

NATIONALITY: U.S. Army	INFORMATION DATE Sept. 1943
DESIGNATION: 500 lb. M-32	TYPE: Demolition H.E. (M - series)
TARGET: Ammunition dumps, railway engines and cars, all types of construction except skyscrapers, and airplanes on ground.	

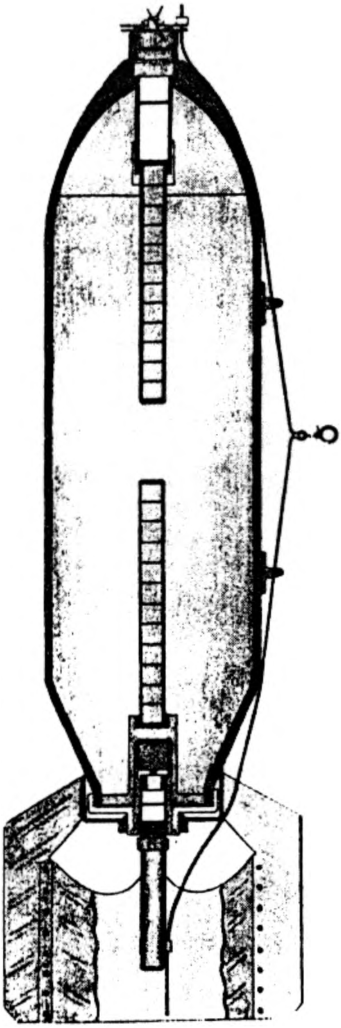

[redacted]

COPY NO.

BOMB DATA FILE NO.

NATIONALITY: U.S. Army	INFORMATION DATE Sept. 1943
DESIGNATION: 600 lb. M-32	TYPE: Demolition H.E. (M - series)

TARGET: Ammunition dumps, railway engines and cars, all types of construction except skyscrapers, and air-planes on ground.

FUZES

REGULAR MISSIONS

Nose.	AN-M-103, M-103
Tail.	AN-M-101A2, AN-M-101A1, M-101

SPECIAL MISSIONS

(1) Masthead bombing:

Nose	Shipping plug until provided with nose fuze specifically for masthead bombing.
Tail	M-113 (Land base planes only) AN-M-116 (Carrier based or land based planes)

Long delay time fuze:

Nose	Shipping plug until provided with fuze specifically for this purpose.
Tail	M-124

DATA	600 lb. M-32
1. OVERALL LENGTH	59.5 "
2. LENGTH OF BODY	49.5 "
3. DIAMETER OF BODY	15.0 "
4. THICKNESS OF WALL	0.35 "
5. MATERIAL OF WALL	Steel.
6. CONSTRUCTION OF BODY.	These bombs may be made by any one of the following methods: 1) from seamless steel tubing in which the nose of the bomb is formed by swaging and the tail by drawing to the necessary dia-meter; 2) or the case may be forged in one piece; 3) or the bomb may be formed from cast sections welded together. These bombs have male base filling plates.
7. TYPE OF SUSPENSION	These bombs are always held horizontally.
8. CONSTRUCTION OF SUSPENSION LUG.	The M series bombs have two eye-bolts welded to body along long-itudinal axis of the bomb. The eyebolts are formed from bar steel, shaped in the form of a

[redacted]

COPY NO.

BOMB DATA FILE NO.

NATIONALITY: U.S. Army	INFORMATION DATE Sept. 1943
DESIGNATION: 600 lb. M-32	TYPE Demolition H.E. (M - series)
8. CONSTRUCTION OF SUSPENSION LUG (Cont'd).	U and then welded to the bomb body.
9. COLOR AND MARKINGS ON BOMB AND TAIL	Prior to March 11, 1942 these bombs would have been painted yellow all over with black manufacturer's markings; but since that date they will be painted olive-drab with a 1 inch yellow band around the nose and extreme rear of the bomb and a 1/4 inch band around the center of gravity.
10. LENGTH OF TAIL	13.9 "
11. WIDTH OF TAIL	20.4 "
12. MATERIAL OF TAIL	Sheet Steel.
13. CONSTRUCTION OF TAIL	This type of tail consists of the following parts: 1) a cast steel sleeve secured to the body of the bomb by a fin locking nut; 2) four fins or vanes; 3) internal box-type struts. One vane and one strut are pressed from one piece of metal and the four pieces are welded together and to the sleeve.
14. WEIGHT OF TAIL	12.6 lbs.
15. TYPE OF FILLING	1) 50-50 Amatol filling with T.N.T. surrounds around the nose and tail booster sleeve to prevent exudation from Amatol during storage. 2) 100% T.N.T. filling. This bomb contains two built-in M-104 auxiliary boosters (one in the nose and one in the tail) which contain tetryl. The M-102 Adapter booster (tetryl) is built in the base plug and receives the tail fuze.

	50-50 Amatol	T.N.T.
16. WEIGHT OF FILLING	319.3 lbs.	336.0 lbs.
17. TOTAL WEIGHT		621.0 lbs.
18. CHARGE/WEIGHT RATIO	54.4 %	54.1 %
19. REMARKS	This bomb is now obsolete.	

[redacted]

BOMB DATA FILE

NATIONALITY: U.S. Army	INFORMATION DATE: Sept. 1943
SIZE: 1100 lbs. M-33	TYPE: Demolition H.E. (M - series)

TARGETS: Ammunition dumps, railway engines and cars, all types of construction except skyscrapers, and airplanes on ground.

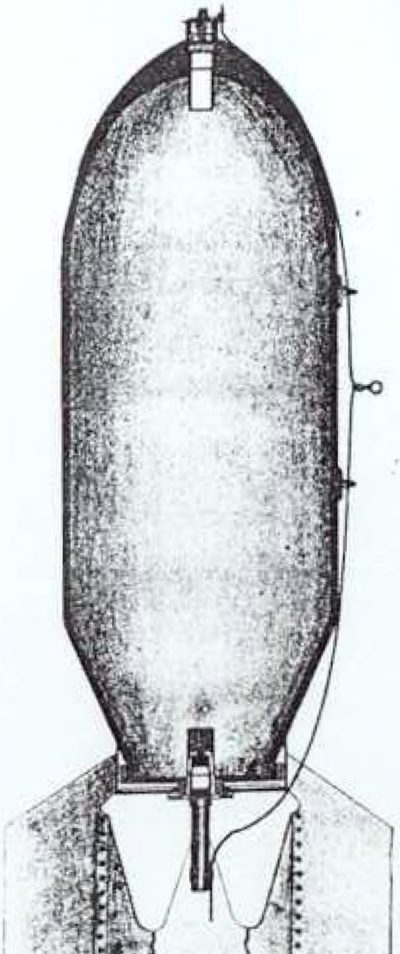

[redacted]

BOMB DATA

COPY NO.
FILE NO.

NATIONALITY: U.S. Army	INFORMATION DATE: Sept. 1943
SIZE: 1100 lbs. M-33	TYPE: Demolition H.E. (M - series)

TARGETS: Ammunition dumps, railway engines and cars, all types of construction except skyscrapers, and airplanes on ground.

FUZES	
<u>REGULAR MISSIONS:</u>	
Nose.	AN-M-103, M-103
Tail.	AN-M-102A2, AN-M-102A1, M-102
<u>SPECIAL MISSIONS:</u>	
(1) Masthead Bombing.	
Nose.	Shipping plug until provided with nose fuze specifically for masthead bombing.
Tail.	M-114 (Land based planes only) AN-M-117 (Carrier or land based planes.
(2) Long delay time.	
Nose:	Shipping plug until provided nose fuse specifically for this purpose.
Tail:	M-125.

DATA	1100 lb. M-33
1. OVERALL LENGTH	68.7 "
2. LENGTH OF BODY	54.7 "
3. DIAMETER OF BODY	19.6 "
4. THICKNESS OF WALL	0.43 "
5. MATERIAL OF WALL	Steel.
6. CONSTRUCTION OF BODY	These bombs may be made by any one of the following methods: 1) From seamless steel tubing in which the nose of the bomb is formed by swaging and the tail by drawing to the necessary diameter; 2) Or the case may be forged in one piece 3) or the bomb may be formed from cast sections welded together. These bombs have male base filling plates.
7. TYPE OF SUSPENSION	These bombs are always held horizontally.
8. CONSTRUCTION OF SUSPENSION LUG	The M series bombs have two eyebolts welded to body along longitudinal axis of the bomb. The eyebolts are formed from bar steel, shaped in the form of a U and then welded to the bomb body.

[redacted]

COPY NO.

BOMB DATA FILE NO.

NATIONALITY: U.S. Army	INFORMATION DATE: Sept. 1943
SIZE: 1100 lb. M-33	TYPE: Demolition H.E. (M - series)
9. COLOR & MARKINGS ON BOMB AND TAIL	Prior to March 11, 1942 these bombs would have been painted yellow overall with black manufacturer's markings but since that date they will be painted olive-drab with a 1 inch yellow band around the nose and the extreme rear of the bomb and a 1/4 inch band around the center of gravity.
10. LENGTH OF TAIL	18.5 "
11. WIDTH OF TAIL	27.0 "
12. MATERIAL OF TAIL	Sheet Steel.
13. CONSTRUCTION OF TAIL	This type of tail consists of the following parts: 1) a cast steel sleeve secured to the body of the bomb by a fin locking nut; 2) four fins or vanes; 3) internal box-like struts. One vane and one strut are pressed from one piece of metal and the four pieces are welded together and to the sleeve.
14. WEIGHT OF TAIL	22.5 lbs.
15. TYPE OF FILLING	1) A 50-50 Amatol filling with T.N.T. surrounds around the nose and tail booster sleeve to prevent exudation from Amatol during storage. 2) 100% T.N.T. filling. This bomb contains two built-in M-104 auxiliary boosters (not shown on drawing) (one in nose and one in tail) which contain tetryl. The M-102 adapter booster (tetryl) is built in the base plug and receives the tail fuze.

	50-50 Amatol	T.N.T.
16. WEIGHT OF FILLING	588.0 lbs.	618.0 lbs.
17. TOTAL WEIGHT OF BOMB.	1083.4 lbs.	1113.4 lbs.
18. CHARGE/WEIGHT RATIO	54.4 %	55.5%
19. REMARKS	This bomb is now obsolete.	

[redacted]

BOMB DATA **FILE NO**

NATIONALITY: U.S. Army	INFORMATION **DATE: Sept. 1943**
SIZE: 2000 lb. M-34	**TYPE: Demolition H.E. (M - series)**

Ammunition dumps ailway ongi and ars all types of construct on exc ot rape and a rplanes on ground

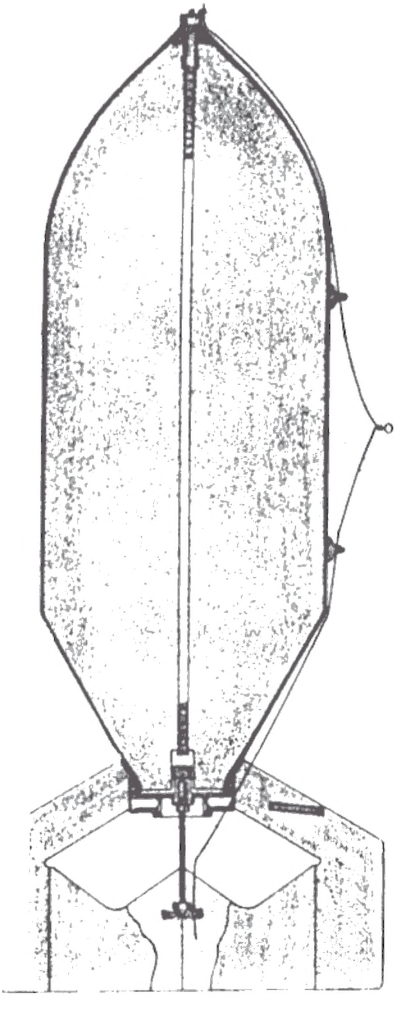

[redacted]

BOMB DATA — FILE NO. — COPY NO.

NATIONALITY: U.S. Army	INFORMATION DATE: Sept. 1943
SIZE: 2000 lb. M-34	TYPE: Demolition H.E. (M - series)

TARGETS: Ammunition dumps, railway engines and cars, all types of construction except skyscrapers, and airplanes on ground.

FUZES	
REGULAR MISSIONS	
Nose.	AN-M-103, M-103
Tail.	AN-M-102A2, AN-M-102A1, M-102
SPECIAL MISSIONS:	
(1) Masthead bombing.	
Nose:	Shipping plug until provided with nose fuse specifically for masthead bombing.
Tail:	M-114 (Land based planes only) AN-M-117 (Carrier and land based planes.)
(2) Long delay time.	
Nose.	Shipping plug until provided with nose fuse specifically for this purpose.
Tail.	M-125.

DATA	2000 lb. M-34
1. OVERALL LENGTH	90.4 "
2. LENGTH OF BODY	70.0 "
3. DIAMETER OF BODY	23.3 "
4. THICKNESS OF WALL	0.5 "
5. MATERIAL OF WALL	Steel.
6. CONSTRUCTION OF BODY.	These bombs may be made by any one of the following methods: 1) From seamless steel tubing in which the nose of the bomb is formed by swaging and the tail by drawing to the necessary diameter; 2) or the case may be forged in one piece 3) or the bomb may be formed from cast sections welded together. These bombs have male base filling plugs.
7. TYPE OF SUSPENSION	These bombs are always held horizontally.
8. CONSTRUCTION OF SUSPENSION LUGS	The M series bombs have two eyebolts welded to body along longitudinal axis of the bomb. The eyebolts are formed from bar steel, shaped in the form of a U and then welded to the bomb body.

[redacted]

BOMB DATA — FILE NO. — COPY NO.

NATIONALITY: U.S. Army	INFORMATION DATE: Sept. 1943
SIZE: 2000 lb. M-34	TYPE: Demolition H.E. (M-series).
9. COLOR & MARKINGS ON BOMB AND TAIL	Prior to March 11, 1942 these bombs would have been painted yellow all over with black manufacturer's markings but since that date they will be painted olive-drab with a 1 inch yellow band around the nose and the extreme rear of the bomb and a 1/4 inch band around the center of gravity.
10. LENGTH OF TAIL	25.7 "
11. WIDTH OF TAIL	31.6 "
12. MATERIAL OF TAIL	Sheet Steel.
13. CONSTRUCTION OF TAIL	This type of tail consists of the following parts: 1) a cast steel sleeve secured to the body of the bomb by a fin locking nut; 2) four fins or vanes; 3) internal box-like struts. One vane and one strut are pressed from one piece of metal and the four pieces are welded together and to the sleeve.
14. WEIGHT OF TAIL	38.6 lbs.
15. TYPE OF FILLING	1) A 50-50 Amatol filling with T.N.T. surrounds around the nose and tail booster sleeve to prevent exudation from Amatol during storage. 2) 100% T.N.T. filling. This bomb contains two built-in M-104 auxiliary boosters (not shown on drawing) (one in nose and one in tail) which contain tetryl. The M-102 adapter booster (tetryl) is built in the base plug and receives the tail fuse.

	50-50 Amatol	T.N.T.
16. WEIGHT OF FILLING.	1061.0 lbs.	1061.0 lbs.
17. TOTAL WEIGHT OF BOMB	2013.4 lbs.	2023.4 lbs.
18. CHARGE/WEIGHT RATIO	52.8%	52.5%

[redacted]

BOMB DATA

COPY NO.
FILE NO.: 1175.C1

NATIONALITY: U.S. ARMY	INFORMATION DATE September 1943
SIZE: 600 lb. M 62 800 lb. M 61	TYPE: A.P. - H.E.
TARGET: Armored naval seacraft, re-inforced concrete and heavy steel construction, etc.	FUZE (Tail): M 102 AN-M 102A1 AN M 102A2

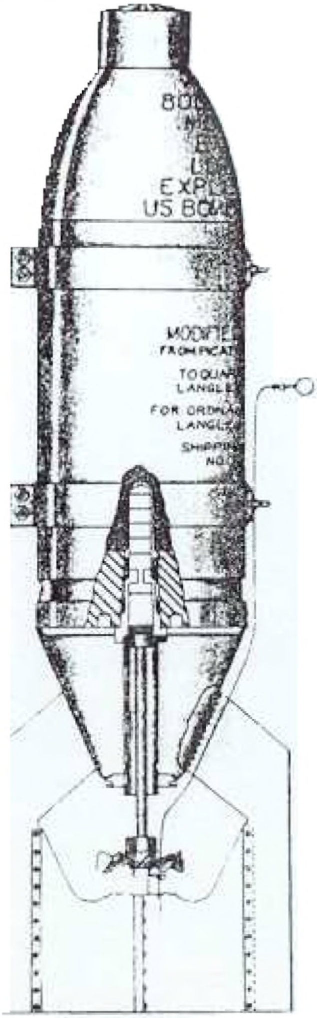

800 lb, M 61

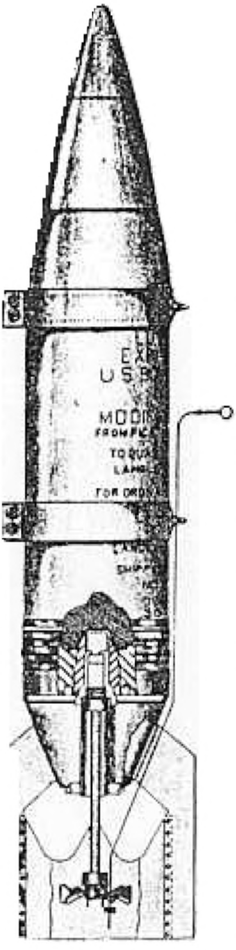

600 lb. M 62

2038

[redacted]

COPY NO.

BOMB DATA FILE NO. 1375.C1

NATIONALITY: U.S. ARMY		INFORMATION DATE: September 1943	
SIZE: 600 lb. M 62 800 lb. M 61		TYPE: A.P. - H.E.	
TARGET: Armored naval seacraft, re-inforced concrete and heavy steel construction, etc.		FUZES (Tail): M 102 AN-M 102A1 AN M 102 A2	

	DATA	600 lb. M 62	800 lb. M 61
1	OVERALL LENGTH	62.06 inches	58.72 inches
	LENGTH OF BODY	46.2 inches	13.4 inches
3	DIAMETER OF BODY	10.0 inches	11.6 inches
4	THICKNESS OF WALL		
5	MATERIAL OF WALL	Steel	Steel
6	CONSTRUCTION OF BODY	These bombs are converted seacoast artillery shells from which the rotating bands may have been removed. The cases are single-piece steel forgings. M 62 and modifications differ only slightly in external dimensions and are all equipped with a nose cap for streamlining.	
7	TYPE OF SUSPENSION	These bombs are always held horizontally.	
8	CONSTRUCTION OF SUSPENSION LUG	Two eyebolts, U-shaped, are welded to plates which are then welded or rivetted to suspension bands. The bands are secured to the case by tightening bolts on under side of bomb.	
9	COLOR & MARKINGS ON BOMB AND TAIL	Prior to March 11, 1942 these bombs would have been painted yellow all over with black manufacturer's markings but since that date they will be painted olive-drab with a 1 inch yellow band around the nose and extreme rear of the bomb and a 1/4 inch band around the center of gravity.	
10	LENGTH OF TAIL	17.8 inches	21.0 inches
11	WIDTH OF TAIL	13.8 inches	18.5 inches
12	MATERIAL OF TAIL	Sheet steel.	Sheet steel.
13	CONSTRUCTION OF TAIL	This type of tail consists of the following parts: 1) A truncated tail cone which is slide fit over bomb base and is secured by a locking nut at top of fuze body; 2) Four fins or vanes; 3) Internal box-type struts. One vane and one strut are pressed from one piece of metal and the four pieces are welded together and to the sleeve.	
14	WEIGHT OF TAIL	1512.0 lbs.	22.4 lbs.
15	TYPE OF FILLING	Explosive D.	Explosive D.
16	WEIGHT OF FILLING	33.61 lbs.	32.68 lbs.
17	TOTAL WEIGHT OF BOMB	576.0 lbs.	787.28 lbs.
18	CHARGE / WEIGHT RATIO	9.3 %	3.8 %

BOMB DATA [redacted] COPY NO.

FILE NO.: 1175.C2

NATIONALITY: U.S. ARMY	INFORMATION DATE: September 1943
SIZE: **900 lb. M 60** / **1000 lb. M 52**	**TYPE: A.P.-H.E.**
TARGET: **Armored naval seacraft, reinforced concrete and heavy steel construction, etc.**	**FUZE (Tail): M 102 AN-M 102A1 AN M 102A2**

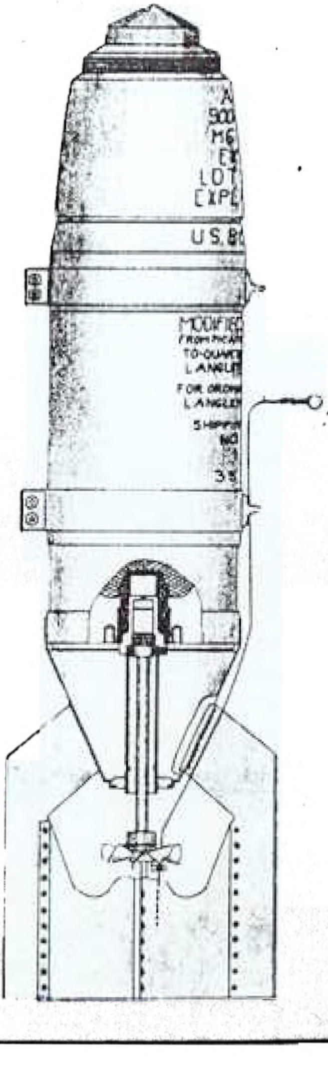

2638

[redacted]

BOMB DATA FILE NO. 1175.C2 COPY NO.

NATIONALITY: U.S. ARMY	INFORMATION DATE: September 1943
SIZE: 900 lb. M 60 1000 lb. M 52	TYPE: A.P.-H.E.
TARGET: Armored naval seacraft, re-inforced concrete and heavy steel construction, etc.	FUZES (Tail): M 102 AN-M 102A1 AN M 102A2

	DATA	900 lb. M 60	1000 lb. M 52
1	OVERALL LENGTH	61.72 inches	70.9 inches
2	LENGTH OF BODY	40.72 inches	50.5 inches
3	DIAMETER OF BODY	11.5 inches	11.9 inches
4	THICKNESS OF WALL		2.3 inches
5	MATERIAL OF WALL	Steel	Steel
6	CONSTRUCTION OF BODY	These bombs are converted seacoast artillery shells from which the rotating bands may have been removed. The cases are single-piece steel forgings.	
7	TYPE OF SUSPENSION	These bombs are always held horizontally.	
8	CONSTRUCTION OF SUSPENSION LUG	Two eyebolts, U-shaped, are welded to plates which are then welded or rivetted to suspension bands. The bands are secured to the case by tightening bolts on under side of bomb.	
9	COLOR & MARKINGS ON BOMB AND TAIL	Prior to March 11, 1942 these bombs would have been painted yellow all over with black manufacturer's markings but since that date they will be painted olive-drab with a 1 inch yellow band around the nose and extreme rear of the bomb and a 1/4 inch band around the center of gravity.	
10	LENGTH OF TAIL	24.5 inches	
11	WIDTH OF TAIL		16.6 inches
12	MATERIAL OF TAIL	Sheet steel.	Sheet steel.
13	CONSTRUCTION OF TAIL	This type of tail consists of the following parts: 1) A truncated tail cone which is slide fit over bomb base and is secured by a locking nut at top of fuze body; 2) Four fins or vanes; 3) Internal box-type struts. One vane and one strut are pressed from one piece of metal and the four pieces are welded together and to the sleeve.	
14	WEIGHT OF TAIL	22.4 lbs.	21.0 lbs.
15	TYPE OF FILLING	Explosive D.	Explosive D.
16	WEIGHT OF FILLING		58.35 lbs.
17	TOTAL WEIGHT OF BOMB		1077.0 lbs.
18	CHARGE / WEIGHT RATIO		5.4 %

BOMB DATA [redacted] COPY NO.
FILE NO.

NATIONALITY: U.S. Army	INFORMATION DATE: September 1943
SIZE: 30 lb. M 5 High Level	TYPE: Fragmentation (anti-Personnel)

TARGET: Personnel, motor convoys, airplanes on the ground, etc., For M-5 used against ground targets by airplanes flying at low altitudes.

	FUZES
NOSE:	For M-5 - Mk XIV
DATA	30 lb. M-5
1. OVERALL LENGTH	25.5" (with fuze)
2. LENGTH OF BODY	13.05"
3. DIAMETER OF BODY	4.2"
4. THICKNESS OF WALL	0.6"
5. MATERIAL OF WALL	Tube - Steel Wrapping - Cast steel

6. CONSTRUCTION OF BODY — The 30 lb. M-5 bomb is constructed the same as the AN M 40 and AN M 41 fragmentation bombs except that the outside wrapping is replaced by rings cut from cast steel pipe.
This is an obsolete bomb.

7. TYPE OF SUSPENSION — These bombs may be carried horizontally, vertically, or in a cluster adapter.

8. CONSTRUCTION OF SUSPENSION LUG — For individual suspension of these bombs a U shaped eyebolt made of steel is welded to bomb at center of gravity. The M-5 has an eyebolt welded to rear of tail for vertical suspension. The cluster adapter is made of sheet metal and does not use eyebolts of bombs for suspension.

9. COLOR & MARKINGS ON BOMB AND TAIL — Prior to March 11 1942 these bombs would have been painted yellow all over with black manufacturer's markings but since that date they will be painted olive-drab with a 1 inch yellow band around the nose and a 1/4 inch band around the center of gravity.

10. LENGTH OF TAIL	—
11. WIDTH OF TAIL	6.5"
12. MATERIAL OF TAIL	Sheet steel and cast iron.

13. CONSTRUCTION OF TAIL — Four rectangular sheet steel vanes welded to a length of 1 inch cast iron pipe which screws into the base filling plug.

14. WEIGHT OF TAIL	—
15. TYPE OF FILLING	T.N.T.
16. WEIGHT OF FILLING	4.66 lbs

BOMB DATA [redacted] FILE NO. COPY NO.

NATIONALITY: U.S. Army	INFORMATION DATE: September 1943
SIZE: 30 lb. M-5 High Level	TYPE: Fragmentation (Anti-personnel
17. TOTAL WEIGHT OF BOMB	29.8 lbs.
18. CHARGE/WEIGHT RATIO	

19. REMARKS: For an illustration which resembles this bomb, refer to the illustration of the AN-M 41 gragmentation bomb. These two bombs are almost identical.

U. S. GAS BOMB IDENTIFICATION

1. Color: U.S. Army and Navy Gas bombs are painted blue or bluish grey over-all.

2. Markings: The bombs have colored bands slightly forward of the center of gravity which indicate the filling and its persistency. A single band indicates that the agent is non-persistent; two bands, that it is persistent. The color scheme is as follows:

   Green..........Casualty agent; usually a vesicant
   Red............Harassing agent; usually a tear gas
   Yellow.........Screening
   Purple.........Incendiary

3. U.S. Projectiles use the same system of marking as described above for the bombs.

4. Information giving the Mark number, weight, lot number, and so forth will usually be painted on the bomb. Letter designations of the different gases may also be present and are as follows:

   HS .... Mustard Gas
   M-1.............. Lewisite
   ED .... Ethyldiclorarsine
   PS .... Chlorpicrin
   DP .... Diphosgene
   CG .... Phosgene
   CN .... Cloracetophenone
   CA .... Brombenzylcyanide
   DM .... Adamsite
   HC .... HC Mixture
   FS .... Sulphur Trioxide
   FM .... Titianium Tetrachloride
   DA .... Diphenylchlorarsine
   WP .... White Phosphorus
   TH .... Thermite
   CL .... Chlorine
   AC .... Hydrocyanic Acid

[redacted]

BOMB DATA

COPY NO.

FILE NO.: 1132.C1

NATIONALITY: U.S. ARMY	INFORMATION DATE: September 1943
SIZE: 30 lb. M46A2 100 lb. M47A1 & A2	TYPE: Smoke Bomb (incendiary & smoke) Chemical Bomb
TARGET: Personnel, or for screening troop movements or operations (using smoke filling).	FUZES: (Nose): M 108 M-126 or M-126A1 in the M-47A1 & A2.

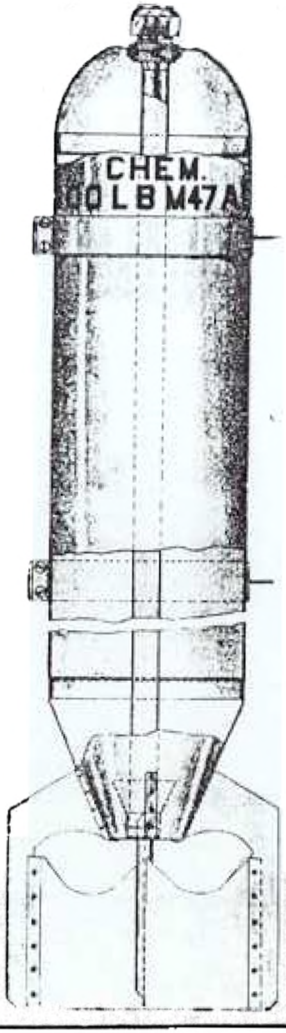

[redacted]

COPY NO.

BOMB DATA FILE NO.

NATIONALITY: U.S. Army.	INFORMATION DATE: Sept. 1943
SIZE: 30 lb. M-46A2 100 lb. M-47A1 & A2	TYPE: Smoke bomb. (incendiary & smoke) Chemical bomb.
TARGET: Personnel, or for screening troop movements or operations (using smoke filling).	FUZES: M-108 M-126 or M-126A1 in the M-47A1 & A2.

DATA	30 lb. M-46A2	100 lb. M-47A1 & A2
1. OVERALL LENGTH	30.7 inches	45.0 inches
2. LENGTH OF BODY	30.7 inches	32.8 inches
3. DIAMETER OF BODY	5.1 inches	8.1 inches
4. THICKNESS OF WALL	1/16 inch.	0.06 inch.
5. MATERIAL OF WALL	Sheet steel.	Sheet steel.
6. CONSTRUCTION OF BODY	Sheet steel tube with hemi-spherical sheet steel nose welded to tube and male-type base plate welded to body.	Tube made of sheet steel with longitudinal seam weld. Nose end is hemi-spherical and rear end is flat plate welded to tube.
7. TYPE OF SUSPENSION	Verticle or horizontal.	Horizontal.
8. CONSTRUCTION OF SUSPENSION LUG	Two eyebolts are formed by holes in each half of the suspension bands, the halves then being crimped together to form a complete band. The bands are secured to bomb body by tightening the bolts on underside of body. For vertical suspension of 30 lb. M-46A2 an eyebolt is fastened at the rear of tail vane assembly.	
9. COLOR & MARKINGS ON BOMB & TAIL	These bombs are painted blue-grey with bands near center of body designating the type of filling. The band colors are: Purple - incendiary; green - gas (casualty agent), one band for a non-persistent gas, two bands for persistent gas; yellow - smoke.	
10. BURSTER		M-4
11. LENGTH OF TAIL	7.3 inches	12.9 inches
12. WIDTH OF TAIL	7.0 inches	10.9 inches
13. MATERIAL OF TAIL	Sheet steel	Sheet steel
14. CONSTRUCTION OF TAIL	Four vanes welded to rear of bomb case.	Four vanes welded to truncated cone with box-type intension struts.

[redacted]

BOMB DATA

COPY NO.
FILE NO. 1182.C1

NATIONALITY: U.S. Army.	INFORMATION DATE: Sept. 1943
SIZE: 30 lb. M-46A2 100 lb. M-47A1 & A2	TYPE: Smoke bomb. (incendiary & smoke) Chemical bomb.
TARGET: Personnel, or for screening troop movements or operations (using smoke filling).	FUZES: M-108 M-126 or M-126A1 in the M-47A1 & A2.

DATA	30 lb. M-46A2	100 lb. M-47A1 & A2.
15. WEIGHT OF TAIL	.	2.16 lbs.
16. TYPE OF FILLING	Smoke charge (wh. phos.)	Chemical filling (HS)
17. WEIGHT OF FILLING	28.1 lbs.	68.5 lbs.
18. TOTAL WEIGHT OF BOMB	39.7 lbs.	98.0 lbs.
19. CHARGE/WEIGHT RATIO	70.8%	70.0%
20. REMARKS:	The M-47A1 differs from the M-47 in the use of lacquer on the inside of the bomb case. The M-47A2 is the same except that a phenolytic lacquer is used.	

BOMB DATA [redacted] FILE NO. COPY NO.

NATIONALITY: U.S. Army-Navy	INFORMATION DATE: Sept. 1943
SIZE: 10 lb. M-67 6 lb. AN-M 69	TYPE: Chemical Incendiary
TARGET: Personnel and installations.	FUZES: M 2 M 1

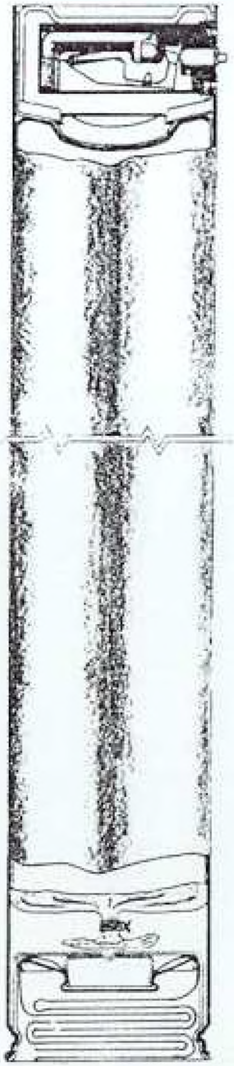

BOMB DATA [redacted] FILE NO. COPY NO.

NATIONALITY: U.S. Army	INFORMATION DATE: September 1943
SIZE: 115 lb. M 70	TYPE: Chemical (Gas)
TARGET: Personnel	FUZES: AN-M 110A1

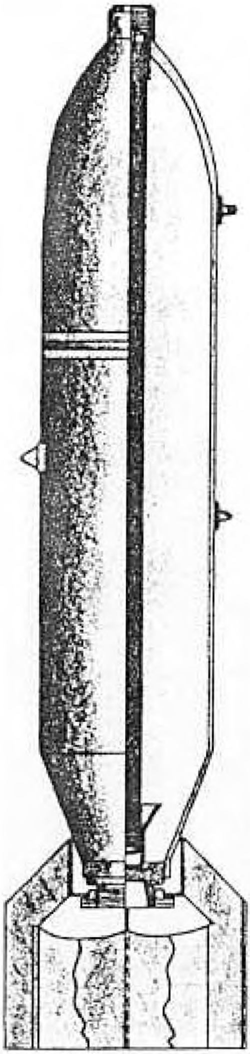

[redacted] COPY NO. 2638

BOMB DATA FILE NO.

NATIONALITY: U.S. Army	INFORMATION DATE: September 1943
SIZE: 115 lb. M 70	TYPE: Chemical (Gas)
TARGET: Personnel	FUZES: AN-M 110A1

<u>DATA</u>	<u>115 lb. M-70</u>
1. OVERALL LENGTH	48.7 inches
2. LENGTH OF BODY	36.95 inches
3. DIAMETER OF BODY	8 3/32 inches
4. THICKNESS OF WALL	.19 to .224 inches

5. CONSTRUCTION OF BODY The body is constructed of seamless steel tubing. A burster well runs the entire length. The nose is spiral.

6. TYPE OF SUSPENSION This bomb is carried by steel suspension lugs welded to the body. There are two lugs on one side, 14" apart and one on the other at the center of gravity. Suspension is horizontal.

7. COLOR & MARKINGS ON BOMB AND TAIL	See Introduction -"Identification U.S. Gas Bombs".
8. BURSTER	M-10
9. LENGTH OF TAIL	12.9 inches
10. WIDTH OF TAIL	10.9 inches
11. MATERIAL OF TAIL	Sheet Steel
12. TAIL CONSTRUCTION box-type struts.	Four vanes welded to cone with
13. TYPE OF FILLING	Chemicals - usually either HS or WP
14. WEIGHT OF FILLING	(HS) 57.1 lbs.
15. TOTAL WEIGHT OF BOMB	122.5 lbs.
16. CHARGE/WEIGHT RATIO	46.6%

[redacted]

COPY NO.________

BOMB DATA

FILE NO.: 1141.C1

NATIONALITY: U.S. ARMY	INFORMATION DATE September 1943
SIZE: Small Size Large Size	TYPE: Signal Cluster Flare
TARGET: Used for signalling between units of troops; ground-air or air ground signals.	FUZES: Percussion cap fuze fired by pistol which ignites quick-match train joining individual clusters of the flare.

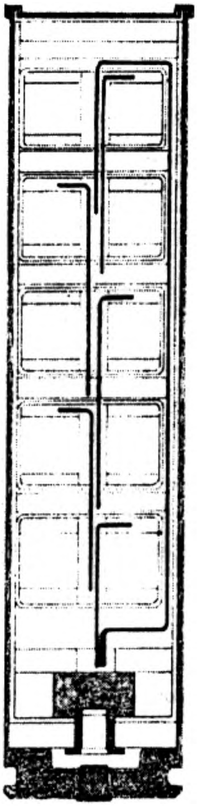

BOMB DATA [redacted] FILE NO. COPY NO. 2638

NATIONALITY: U.S. Army-Navy	INFORMATION DATE: Sept. 1943
SIZE: 10 lb. M-67 6 lb. AN-M 69	TYPE: Chemical : Incendiary
TARGET: Personnel and installations.	FUZES: M 2 M 1

DATA	M 67	AN-M 69
1. OVERALL LENGTH	19½"	19½"
2. LENGTH OF BODY	19½"	19½"
3. DIAMETER OF BODY	3.134"max	3.134" max
4. THICKNESS OF WALL	.019"	.0418"

5. MATERIAL OF WALL Cold rolled steel

6. CONSTRUCTION OF BODY Rounded, hexagonal shape. The M 1 or M2 fuze is of the horizontal type and is in the side near the blunt nose end. The tail consists of gauze streamers about 4½' long. There is a tail cup and nose cup.

7. TYPE OF SUSPENSION These bombs are suspended in clusters-the following data applies:

AN-M 69	100# cluster	14 bombs	98#
AN-M 69	500# "	60 "	417#
M 67	100# "	14 "	151#
M 67	500# "	60 "	645#

8. TAIL The tail consists of gauze streamers about 4½' long folded into a cup. These may have a green tint.

9. COLOR & MARKINGS ON BOMB Grey color overall. On the bomb are stencilled or painted the filling symbol, designation, loader's initials, date of filling, lot number.

10. FILLING	Usually oil, SAE No. 10	Usually white phosphorus
11. TOTAL WEIGHT	10 lbs.	6 lbs.

12. REMARKS: Both of the above bombs are very similar; a difference in weight due to the filling. The M2 and M 1 are inertia type impact fuzes held in the safe position until the cluster is dispersed by a spring detent. A lacquer coating is applied to the interior of each.

[redacted] COPY NO. ____________

BOMB DATA FILE NO.: 1142.C1

NATIONALITY: U.S. ARMY	INFORMATION DATE: September 1943.
SIZE: 23 lb. M23A1 50 lb. M 46	TYPE: Photoflash Bomb
TARGET: Used for night photography.	FUZES: M 23A1 - Friction-pull igniter M 46 - Nose Fuze M 111

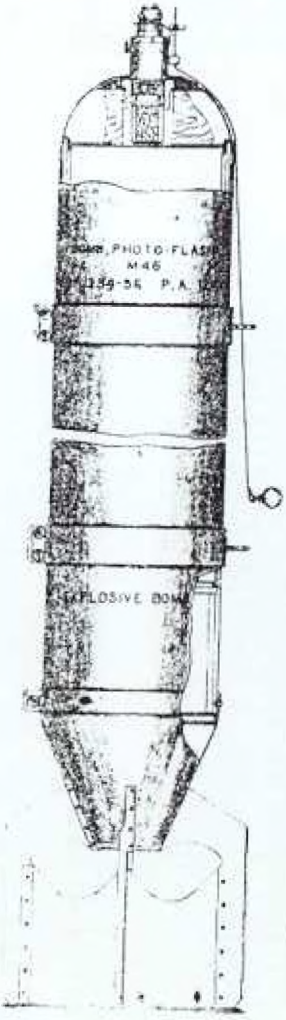

2638

[redacted]L COPY NO.

BOMB DATA FILE NO.: 1142.C1

NATIONALITY: U.S. ARMY		INFORMATION DATE: September 1943	
SIZE: 23 lb. M23A1 50 lb. M46		TYPE: PHOTOFLASH BOMB	
TARGET: Used for night photography		FUZES: M 23A1 - Friction-pull igniter M 46 - Nose Fuze M 111	

	DATA	23 lb. M 23A1	50 lb. M 46
1	OVERALL LENGTH	25.4 inches	45.2 inches
2	LENGTH OF BODY	25.4 inches	33.6 inches
3	DIAMETER OF BODY	4.42 inches	8.0 inches
4	THICKNESS OF WALL	0.3 inch	0.06 inch
5	MATERIAL OF WALL	Cardboard	Sheet steel.
6	CONSTRUCTION OF BODY	The case of this bomb is made of laminated cardboard, the layers being glued together and coated inside and outside with shellac. The ends are closed by two tin caps.	Body is made of pressed sheet steel with hemi-spherical nose and flat base plate rivetted to body.
7	TYPE OF SUSPENSION	These bombs are always held horizontally.	
8	CONSTRUCTION OF SUSPENSION LUG	Two eyebolts are formed by holes in the suspension bands, the bands then being crimped together. On the underside of the bomb the eyebolts are drawn tight to bomb case by bolts.	
9	COLOR & MARKINGS ON BOMB AND TAIL	The body is painted blue-grey with markings giving bomb designation and manufacturer's marks being stencilled in black paint or ink.	
10	LENGTH OF TAIL	No tail.	14.0 inches
11	WIDTH OF TAIL	No tail.	11.12 inches
12	MATERIAL OF TAIL	No tail.	Sheet steel.
13	CONSTRUCTION OF TAIL	No tail.	Four vanes are rivetted or spot-welded to tail cone and internal box struts. Flat 'brake' plate is rivetted to box struts.
14	WEIGHT OF TAIL	No tail.	
15	TYPE OF FILLING	Photographic flash powder. The candle-power of this bomb is 85,000,000 candle-power. Burning time is 0.16 second.	Photographic flash powder. 500,000,000 Candle power. Burning time - 0.16 seconds.
16	WEIGHT OF FILLING	7.8 lbs.	
17	TOTAL WEIGHT OF BOMB	23.8 lbs.	51.9 lbs.
18	CHARGE / WEIGHT RATIO		

[redacted] COPY NO..

BOMB DATA | FILE NO.: 1112.A1

NATIONALITY: U.S. NAVY	INFORMATION DATE: **Sept. 1943**
SIZE: 30 lb. Mk. V Mod. 1 30 lb. Mk. V Mod. 2 30 lb. Mk. V Mod. 3	TYPE: Fragmentation - H.E.
TARGETS: Personnel, motor convoys, airplanes on the ground, etc.	FUZES: Mk. V Mod. 1 - Mk. 14 Army Nose Fuze Mk. V Mod. 2 - Mk. XIX Navy Nose Fuze Mk. V Mod. 3 - Mk. XIX Navy Nose Fuze

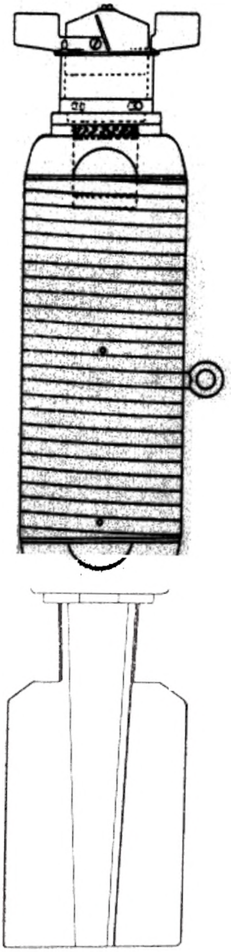

638

[redacted] COPY NO.

BOMB DATA FILE NO.: [illegible]41.C1

NATIONALITY: U.S. ARMY	INFORMATION DATE: September 1943
SIZE: Small Size Large Size	TYPE: Signal Cluster Flare
TARGET: Used for signalling between units of troops; ground-air or air ground signals.	FUZES: Percussion cap fuze fired by pistol which ignites quick-match train joining individual clusters of the flare.

	DATA	Small Size	Large Size
1	OVERALL LENGTH	9.0 inches (ground type)	7.6 inches
2	LENGTH OF BODY	5.7 inches	7.6 inches
3	DIAMETER OF BODY	1.5 inches	1.5 inches
4	THICKNESS OF WALL	0.07 inch	0.05 inch
5	MATERIAL OF WALL	Sheet aluminum alloy.	Sheet aluminum alloy.
6	CONSTRUCTION OF BODY	These flares are constructed from seamless aluminum alloy tubing, into the nose of which is fitted an alloy fitting, housing the igniter system. The tube is closed at the tail end by a closing plug which is a push-fit in the tube.	
7	TYPE OF SUSPENSION	Not suspended.	Not suspended.
8	CONSTRUCTION OF SUSPENSION LUG	Shot from M2 pyrotechnic pistol.	
9	COLOR & MARKINGS ON BOMB AND TAIL	Unpainted metal. The closing plug or tail vanes are painted the same color as the flare when it burns. The tail of ground flares are painted to match color of flare cluster.	
10	LENGTH OF TAIL	3.3 inches	No tail.
11	WIDTH OF TAIL	1.6 inches	No tail.
12	MATERIAL OF TAIL	Sheet metal.	No tail.
13	CONSTRUCTION OF TAIL	There are two types of signal flares, ground and aircraft. The aircraft types has no tail assembly. Thin tube with four small vanes spot-welded to tube. The tube is welded to the closing plug of the case.	
14	WEIGHT OF TAIL		No tail.
15	TYPE OF FILLING	Flare composition contained in cylindrical aluminum cases.	
16	WEIGHT OF FILLING		
17	TOTAL WEIGHT OF BOMB		
18	CHARGE / WEIGHT RATIO		

PART

SECTION B

NAVY BOMBS

[redacted]

BOMB DATA	COPY NO. FILE NO. 1154.A1
NATIONALITY: U.S. Navy	INFORMATION DATE Sept. 1943
SIZE: 500 lb. Mk XII Mod. 2	TYPE: General purpose demolition.

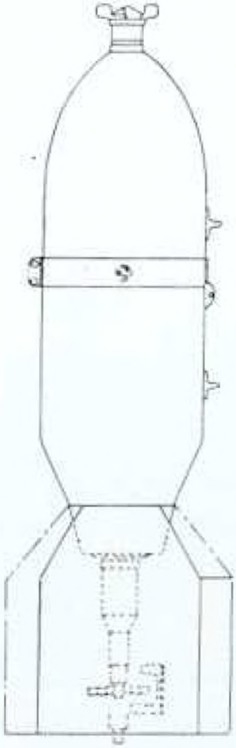

Mark XII Mod. 2

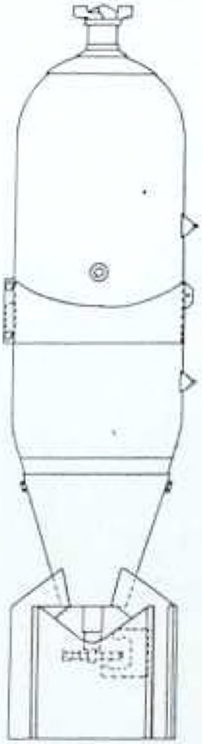

Mark IX

[redacted] COPY NO. 2633

BOMB DATA FILE NO.: 1112.A1

NATIONALITY: U.S. NAVY	INFORMATION DATE: Sept. 1943
SIZE: 30 lb. Mk. V Mod. 1 30 lb. Mk. V Mod. 2 30 lb. Mk. V Mod. 3	TYPE: Fragmentation - H.E.
TARGETS: Personnel, motor convoys, airplanes on the ground, etc.	FUZES: Mk. V Mod. 1 - Mk. 14 Army Nose Fuze Mk. V Mod. 2 - Mk. XIX Navy Nose Fuze Mk. V Mod. 3 - Mk. XIX Navy Nose Fuze

	DATA	30 lb. Mk. V Mod. 1, 2 & 3
1	OVERALL LENGTH	22.2 inches
2	LENGTH OF BODY	12.8 inches
3	DIAMETER OF BODY	4.2 inches
4	THICKNESS OF WALL	0.57 inch
5	MATERIAL OF WALL	Steel
6	CONSTRUCTION OF BODY	Cast steel nose and tail piece threaded onto tubular steel body. The only difference in construction is that in the Mk. V Mod. 1 and 2, 23 rings cut from seamless tubing are fitted around the tubular body, while on the Mk. V Mod. 3 a steel wire is helically wound left-handed. The adjacent surfaces of wire are parallel.
7	TYPE OF SUSPENSION	These bombs are suspended horizontally.
8	CONSTRUCTION OF SUSPENSION LUG	A single eyebolt is screwed into a ring at center of the body.
9	COLOR & MARKINGS ON BOMB AND TAIL	Painted yellow or may be painted grey with yellow disc on body.
10	LENGTH OF TAIL	7.0 inches (without cone)
11	WIDTH OF TAIL	6.5 inches
12	MATERIAL OF TAIL	Sheet steel.
13	CONSTRUCTION OF TAIL	Four vanes welded to tail cone. The tail cone is secured to base plug by a single bolt.
14	WEIGHT OF TAIL	2.5 lbs.
15	TYPE OF FILLING	Cast T.N.T.
16	WEIGHT OF FILLING	4.5 lbs.
17	TOTAL WEIGHT OF BOMB	33.4 lbs.
18	CHARGE /WEIGHT RATIO	13.0 %

[redacted] COPY NO. ____________

BOMB DATA

FILE NO.: 1152.A1

	INFORMATION DATE: September 1943
SIZE: 100 lb. Mark I Mods. 2&3 100 lb. Mark IV Mods. 1&4	TYPE: G.P.-H.E. Bombs
TARGET: Ammunition dumps, airplanes, railway tracks, engines and cars, all types construction, except modern seacraft and battleships.	FUZES: Mark 19 U.S. Navy fuze.

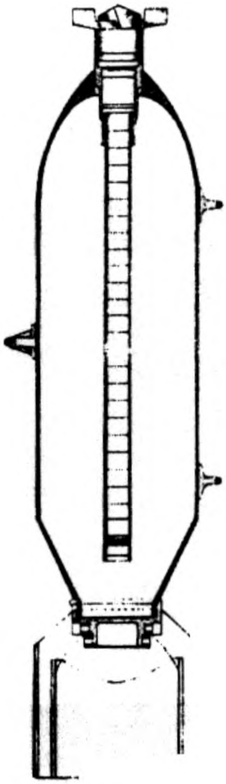

rk IV

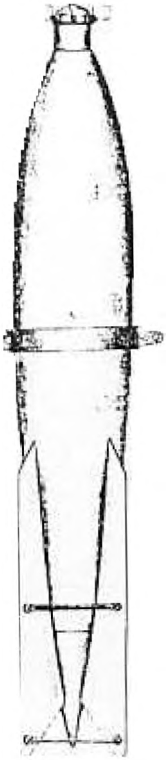

Mk I

[redacted] COPY NO. 2638

BOMB DATA

FILE NO.: 1152.A1

NATIONALITY: U.S. NAVY	INFORMATION DATE: September 1943.
SIZE: 100 lb. Mark I Mods. 2&3 100 lb. Mark IV Mods. 1&4	TYPE: G.P.-H.E. Bombs
TARGET: Ammunition dumps, airplanes, railway tracks, engines and cars, all types construction, except modern seacraft and battleships.	FUZES: Mark 19 U.S. Navy fuze.

	DATA	100 lb. Mark I Models 2 & 3	100 lb. Mark IV Models 1 & 4
1	OVERALL LENGTH	46.6 inches - Model 2 46.8 inches - Model 3	36.2 inches
2	LENGTH OF BODY		28.0 inches
	DIAMETER OF BODY	7.9 inches	8.0 inches
	THICKNESS OF WALL		0.175 inch
		Sheet Steel	Steel
6	CONSTRUCTION OF BODY	Two steel castings welded together.	Single piece steel forging.
7	TYPE OF SUSPENSION	Horizontal	Horizontal
8	CONSTRUCTION OF SUSPENSION LUG	Two lugs welded to bomb body. May have single lug or trunnions on a band around the body.	Two lugs welded on body 14 inches apart; a single lug is welded on opposite side, 180 degrees removed from the two lugs.
9	COLOR & MARKINGS	Grey body with 11 inch yellow disc between lugs or may be painted yellow all over.	Blue grey with 1 inch yellow band around fuze opening or may be painted all over.
10	LENGTH OF TAIL	21.0 inches	9.1 inches
11	WIDTH OF TAIL	9.8 inches	11.0 inches
12	MATERIAL OF TAIL	Sheet Steel	Sheet Steel
13	CONSTRUCTION OF TAIL	Four vanes which pass down over the body are welded to a tail cone. The vanes are fastened to body of the bomb by screws and are braced by two sets of bar struts rivetted to vanes.	Four vanes welded to a sleeve which is secured to bomb body with a locking nut. Box type internal struts are welded to the vanes.
14	WEIGHT OF TAIL		
15	TYPE OF FILLING	T.N.T.	T.N.T.
16	WEIGHT OF FILLING	65 lbs.	55 lbs.
17	TOTAL WEIGHT OF BOMB	116 lbs.	120 lbs. - Model 1 105 lbs. - Model 4
18	CHARGE / WEIGHT RATIO	56 %	46 %
19	REMARKS	The Mark IV Model 1 & 4 are the regular service bombs being used with both Mark I Model 2 & 3 being obsolete; however some of these latter bombs are in storage and may be used.	

[redacted]

COPY NO.

BOMB DATA FILE NO. 1155.A1

NATIONALITY: U.S. Navy	**INFORMATION DATE:** Sept. 1943
SIZE: 1000 lb. Mk XIII Mod.2	**TYPE:** General purpose bomb.

TARGET: Troops and airplanes on the ground, bivouac areas, merchant ships and lightly armored vessels. To dig craters in airfields, use the Mk 221 fuze-short delay.

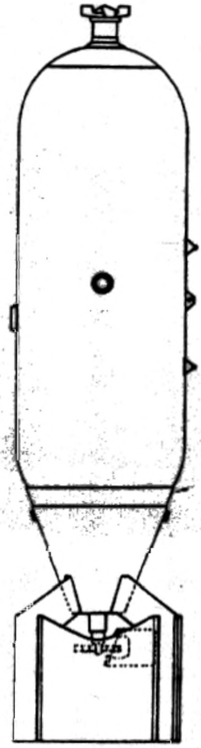

Mark V & IX

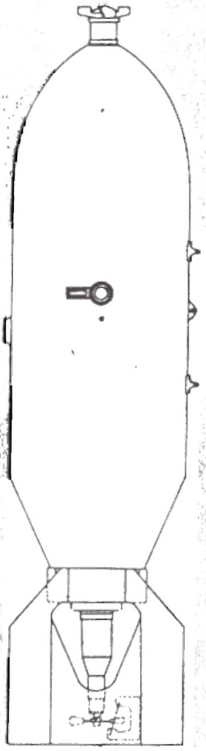

Mark XIII

FLARE DATA [redacted] FILE NO. COPY NO.

NATIONALITY: U.S. Navy	INFORMATION DATE: September 1943
DESIGNATION: 18 lb. Mk 5 30 lb. Mk 6	

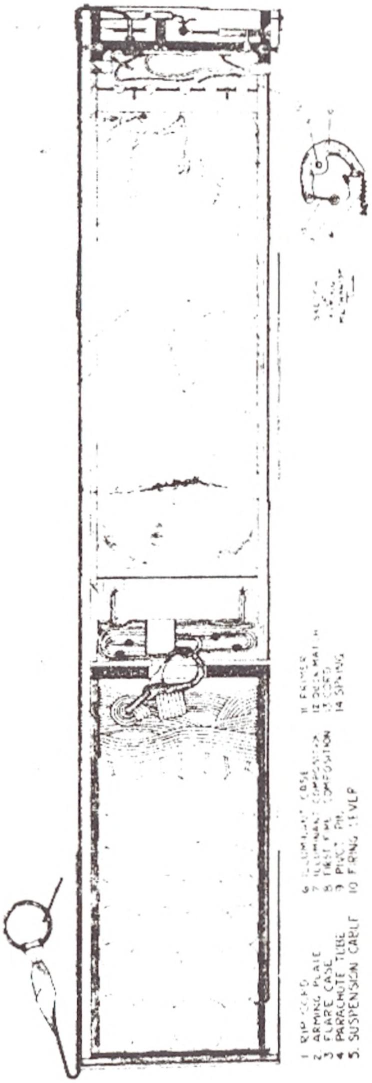

[redacted]

COPY NO. 2638

BOMB DATA FILE NO. 1155.A1

NATIONALITY: U.S. Navy	INFORMATION DATE: Sept. 1943
SIZE: 1000 lb. Mk XIII Mod.2	TYPE: General purpose bomb.

TARGET: Troops and airplanes on the ground, bivouac areas, merchant ships and lightly armored vessels. To dig craters in airfields, use the Mk 221 fuze-short delay.

FUZES

Nose:	Mk 219 instantaneous fuze: bomb shipped with one auxiliary booster - another auxiliary booster should be inserted and Mk 19 adapter used with Mk 219 fuze. Mk 221, (.01 second delay) fuze: only necessary to insert the fuze. Mk XIII, Mod. 2 - now obsolete
Tail:	Mk XXIII, (.08 second delay) Mk XV Mod 1 - now obsolete

DATA	Mk XIII Mod.2
1 OVERALL LENGTH	72.6"
2. LENGTH OF BODY	53.0"
3. DIAMETER OF BODY	17.7"
4. THICKNESS OF WALL	0.45"
5. MATERIAL OF WALL	Steel
6. CONSTRUCTION OF BODY	One piece which is either drawn or forged.
7. SUSPENSION: This bomb is equipped with the three suspension lugs. A trunnion band may be used for external suspension on dive bombers.	
8. COLOR AND MARKINGS ON BOMB AND TAIL These bombs are painted grey with yellow disc 11 inches in diameter between suspension lugs; also may be painted yellow all over.	
9. LENGTH OF TAIL	22.3"
10. WIDTH OF TAIL	23.5"
11. MATERIAL OF TAIL	Sheet steel
12. CONSTRUCTION OF TAIL	Four vanes welded to tail cone which is secured to body by a locking nut which screws onto projection of rear cap.
13. TYPE OF FILLING	T.N.T.
14. WEIGHT OF FILLING	511.0 lbs.
15. CHARGE/WEIGHT RATIO	51.0%

16. REMARKS: The 1000 lb. Mk V, Mk IX and MK XIII Mod. 1 have been obsolete for some time. Manufacturing of the Mk XIII Mod. 2 has ceased. This is done under the plan of Army-Navy standardization.

[redacted]

FLARE DATA — FILE NO. — COPY NO.

NATIONALITY: U.S. Navy	INFORMATION DATE: Sept.1943
DESIGNATION: 18 lb. MK 4 and Mods(all)	
CLASSIFICATION	Flare parachute night landings.

USE: Illumination of a large landing area.
May be used for reconnoitering and bombing.
Can be used by low flying planes to blind anti-aircraft defenses.
Must be used by planes flying at 3,000 to 4,000 feet to get best lighting effect as full suspension and ignitio occurs about 30 to 50 feet below plane.

DATA:

Burning time	3 - 3½ minutes
Rate of fall after ignition	300 ft. per minute
Intensity	300,000 candlepower
Color	White
Weight as dropped	18 lbs
Length of flare case	27 inches
Diameter of flare case	5.2 inches
Mounting on aircraft	

The aircraft flare MK4 may be released by any of the following three methods:

1. Bomb rack or shackle release
   - MK 50 and 51 racks
   - MK 3 and Mods. shackles
   - MK 4 and Mods. 2 and above
   - MK 5 and Mods.

   The MK 35 and MK 41 racks are not designed to operate with less than a 100 lb load and should not be used with this flare.
2. Adapter (chute or holder) release.
   Support bands are not used in this installation. Insert the flare into the adapter with the heavy end down. The flare is released by pulling the flare release handle M 2 located in the cockpit.
3. Cockpit release (emergency use only) no support bands used.

An additional 10 feet of rip cord must be provided and secured to some substantial part of the plane. Extreme care must be observed in securing the flare within the cockpit. There is a record of at least one accident due to ignition of the loose flare when the plane was catapulted.

Launch the flare by throwing it over the side in a vertical position with heavy end down. It should be released with as much downward velocity as possible so that it will be well clear of the plane when the rip cord becomes taut.

FUNCTIONING:

As the flare falls away from the bomb rack or shackle the arming wire retainer of the bomb rack retains the arming wire plate. The rip cord, which is fastened to the arming wire plate, tears along the side of the flare until it reaches the end of the flare casing. As the flare continues to fall, the rip cord, which is wound around a wooden spool inside the end of the flare casing, unwinds, thus tearing away the end of the flare casing. The spool, thereupon, falls away. The tension on the rip cord retains the parachute tube and, as the flare case falls away from the parachute tube, the parachute is pulled out of the lower end of the tube by the suspension cable and parachute shrouds.

An ignition wire is attached to the suspension cable in such a manner that it is pulled out before the cable is fully extended. The ignition wire pulls four friction wires through primer cups of match compound. This ignites a double quick match which burns down the outside of the illuminate

2638

[redacted]

COPY NO.

FLARE DATA FILE NO.

NATIONALITY: U.S. Navy	INFORMATION DATE Sept 1943.
DESIGNATION: 18 lb. MK 4 and Mods(all)	
CLASSIFICATION	Flare parachute night landing

FUNCTIONING (Cont'd)

case, ignites the primer composition, then first fire composition which in turn ignites the illuminate composition.

In the meantime, the weight of the flare has pulled the suspension wire and shrouds taut and the parachute is pulled out of the parachute tube. When the parachute and parachute shrouds are fully extended the release key cord pulls taut and pulls the release key down. This allows the rip cord to slip through the key and clear. The parachute opens and suspends the flare and the parachute tube falls clear. Full suspension and ignition occurs about 30 to 50 feet below the plane.

FLARE DATA [redacted] FILE NO. COPY NO.

NATIONALITY: U.S. Navy	INFORMATION DATE: September 1943
DESIGNATION: 18 lb. Mk 5 30 lb. Mk 6	
CLASSIFICATION	Aircraft parachute flare for night bombardment.

USE:

The mark 5 and mods. Aircraft Flare is used for the purpose of illuminating a large area sufficiently to permit reconnoitering, bombing or the landing of aircraft. Can be used at altitudes up to 15,000 or 16,000 feet as the time delay fuze can be set to function the flare from a minimum of 300 feet to a maximum of 12,000 feet below the plane.

DATA

Burning time	Approx. 3 minutes
Rate of fall after ignition	450 feet/minute
Intensity	75,000 candlepower
Color	
Mark 5, Mark 5 Mods 1 & 2	White
Mark 5, Mods. 3 to 7 inclusive	Yellow
Weight as dropped	18 lbs.
Length of flare case	27 in.
Diameter of flare case	4.75 in.

MOUNTING ON AIRCRAFT

The aircraft flare Mk 5 and mods may be released by the same methods as the Aircraft Flare, Mk 4, EG Bomb rack or shackle adapter (chute or holder) release or cockpit release by throwing manually over the side. When using the support bands, which are supplied with the flare, make sure the rip cord is not under the bands.

IGNITION DELAY

Mounted in one end of the flare is a variable time delay fuze. The setting is made by turning the indicator on the metal firing mechanism housing to the desired delay. The delay is shown on the bevel of the fuze setting ring and indicates the vertical distance the flare will drop before igniting.

OPERATION:

When the flare is released from the plane, the arming plate on the end of the lanyard is retained on the plane. The lanyard tears from the side of the case and flips the fuze end cover off and pulls the snap cord attached to the firing lever. The combination of the inertia of the flare and the effect of air currents on the flare pulls the firing lever away from the primer and then breaks the snap cord. A pull of approximately 38 pounds is required to break the snap cord. The lever spring then drives the firing lever back against the fulminate of mercury primer.

The flame from the primer ignites the black powder pellets in the fuze plunger. The expanding gases from the burning of the black powder force the sharp point of the plunger radially outward into the Ensign Bickford time fuze. The time fuze burns at the rate of 12 inches per 60 second interval. There are three small holes near the point of the plunger which allow some of the flame to escape from the inside of the plunger into the powder of the Ensign Bickford fuze. The point at which the fuze starts to burn is determined by the drop desired before ignition of the flare and is regulated as described above.

FLARE DATA [redacted] FILE NO. COPY NO.

NATIONALITY: U.S. Navy	INFORMATION DATE: September1943
DESIGNATION: 18 lb. Mark 5 30 lb. Mark 6	
CLASSIFICATION	Aircraft parachute flare for night bombardment.

The time fuze which is at the periphery of the metal firing mechanism housing, burns its predetermined length and ignites the quickmatch under the fuze block. This, in turn, ignites the quickmatch and fire cracker fuze stapled to the ignition composition.

The gases evolved when the ignition composition begins to burn force the parachute and illuminant out of the flare case. The Parachute opens and the trigger snap, on the end of the shroud lines, slides up the retention cable until it is stopped by the cable stop. A short length of cable beyond the cable stop suspends the flare case well away from the burning flare. This also keeps the case from dropping as a missile hazard.

OPERATIONAL INFORMATION:

In order to use the full burning time of the flare to best advantage the altitude at which it is to be released should be about 3,500 feet greater than the fuze setting. The flare falls about 1,800 feet while burning.

Some difficulty may be encountered if the Aircraft Flare mark 5 and Mods. up to and including Mod. 7 is dropped from a shackle in a plane equipped with a bomb bay. The air currents entering the bomb bay often tend to reduce the stress on the snap cord with the result that the cord does not break and the flare remains suspended from the cord. This allows the flare to bang around in the bomb bay and it may cause some damage to the plane. There is danger, also, that it might ignite while still in the bomb bay. If an additional 6 feet of rip cord is attached to the connecting ring plate, the flare will fall far enough below the plane so that the normal forces will act upon it and cause the snap cord to break.

This difficulty has been overcome by redesigning the fuze. The new fuze requires only an eight pound pull to operate the firing lever. The cord pulls away instead of breaking after tripping the firing lever. Aside from the changes in the firing lever and cord, the new fuze operates the same as the old one. The flare with the new firing mechanism is designated as the Mark 5, Mods 8-12 inclusive.

Note: The 30 lb. Mk 6 flare is the same as the Mk 5 with these exceptions:

Data:

Burning time	3 to 3.5 min.
Rate of fall after ignition	450 ft. per min.
Intensity	1,000,000 Candlepower
Color	Yellow
Weight as dropped	30 lbs.
Length overall	37.75 in.
Diameter of flare case	5.37 ib.
Pull required to break snap cord	38 lbs

FUNCTIONING:

This flare functions the same as the Mark 5 with the exception that it has an auxiliary parachute to aid the opening of the main chute.

[redacted] COPY NO. ____________

BOMB DATA FILE NO.: 1122.A1

NATIONALITY: U.S. NAVY	INFORMATION DATE: September 1943
SIZE: 100 lb. Mark I 100 lb. Mark XXVIII	**TYPE:** Incendiary Bombs
TARGET: Buildings of frame construction.	**FUZES(Nose):** M-108 (Army fuze)

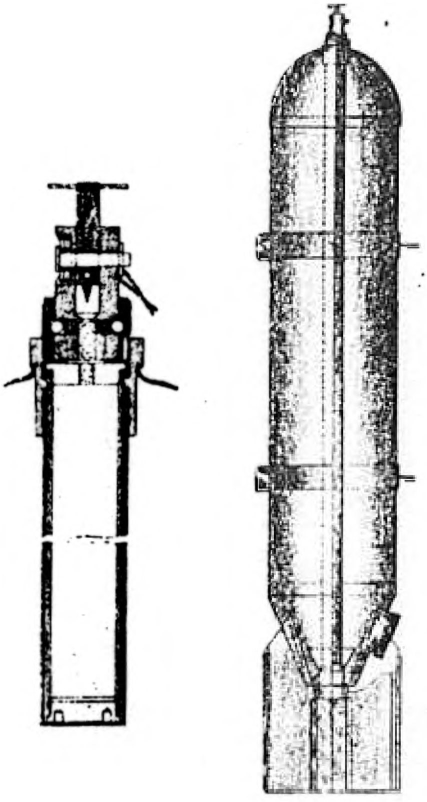

[illegible] DATA [redacted] COPY NO. ______
FILE NO.: 1186.a1

NATIONALITY: U.S. NAVY	INFORMATION DATE: September 1943
SIZE: [illegible]	TYPE: Aircraft Mine

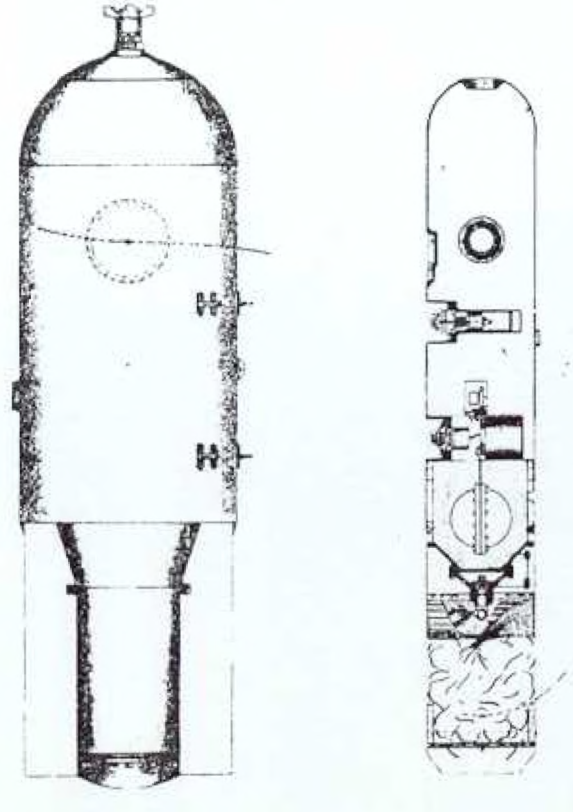

2638

[redacted]

BOMB DATA — COPY NO.— FILE NO.: 1122.41

NATIONALITY: U.S. NAVY	INFORMATION DATE: September 1943
SIZE: 100 lb. Mark I 100 Lb. Mark XXVIII	TYPE: Incendiary Bombs
TARGET: Buildings of frame construction.	FUZES (Nose): M-108 (Army fuze)

	DATA	100 lb. Mark I	100 lb. Mark XXVIII
1	OVERALL LENGTH	45.4 inches	45.4 inches
2	LENGTH OF BODY	36.0 inches	33.7 inches
3	DIAMETER OF BODY	8.0 inches	8.0 inches
4	THICKNESS OF WALL	.05 inch	.05 inch
5	MATERIAL OF WALL	Sheet Steel	Sheet Steel
6	CONSTRUCTION OF BODY	These bombs have a three piece construction with a hemi-spherical nose piece and conical tail cone welded to a tubular body.	
7	TYPE OF SUSPENSION	These bombs are suspended horizontally.	
8	CONSTRUCTION OF SUSPENSION LUG	Two suspension lugs on bands or may have single lug on band near center of gravity.	
9	COLOR & MARKINGS ON BOMB AND TAIL	These bombs are painted grey with a bright red disc 4 inches in diameter in the middle of the body	
10	LENGTH OF TAIL	10.6 inches	11.75 inches
11	WIDTH OF TAIL	11.5 inches	11.3 inches
12	MATERIAL OF TAIL	Sheet Steel	Sheet Steel
13	CONSTRUCTION OF TAIL	Four vanes welded to tail cone which in turn is welded to bomb body.	
14	WEIGHT OF TAIL		
15	TYPE OF FILLING	These bombs may be filled with gasoline; cotton waste saturated with gasoline; or a mixture of gasoline and rubber. The exploder tube is filled with black powder.	
16	WEIGHT OF FILLING	The weight of filling is approximately 42.2 lbs., when cotton waste and gasoline mixture is used.	
17	TOTAL WEIGHT OF BOMB	67.1 lbs.	67.1 lbs.
18	CHARGE / WEIGHT RATIO	63.0 %	63.0 %
19	REMARKS	1. These two bombs are similar except the Mark I is filled through the nose opening while the Mark XXVIII is filled through a cap on the tail cone. 2. The Mark I bomb is the same as the Army M-47 bomb.	

BOMB DATA [redacted] FILE NO.: 1191.A1 COPY NO. ______

NATIONALITY: U.S. NAVY	INFORMATION DATE: September 1943
SIZE: 3 lb. Type C (Mk. XXXII) 5 lb. Mk. XXXIV	TYPE: Anti-aircraft H.E. Bomb
TARGET: Enemy aircraft in flight or on the ground.	FUZES: Nose Fuze Mk. XXVII

[redacted] COPY NO. 2638

BOMB DATA FILE NO.: 1191.A1

NATIONALITY: U.S. NAVY	INFORMATION DATE: September 1943
SIZE: 3 lb. Type C (Mk. XXXII) 5 lb. Mk. XXXIV	TYPE: Anti-aircraft H.E. Bomb
TARGET: Enemy aircraft in flight or on the ground.	FUZES: Nose Fuze Mk. XXVII

	DATA	3 lb.	5 lb.
1	OVERALL LENGTH	15.0 inches	15.4 inches
2	LENGTH OF BODY		12.0 inches
3	DIAMETER OF BODY	2.1 inches	3.0 inches
4	THICKNESS OF WALL	.025 inch	.05 inch
5	MATERIAL OF WALL	Sheet steel.	Sheet steel.
6	CONSTRUCTION OF BODY	Nose and conical tail section welded to cylindrical body.	Reinforced nose and conical tail section welded to cylindrical body.
7	TYPE OF SUSPENSION	Carried in Mk. II container which holds four bombs.	Carried in Mk. II container holding four bombs or in Mk. III container holding 20 bombs.
8	CONSTRUCTION OF SUSPENSION LUG		
9	COLOR & MARKINGS ON BOMB AND TAIL	Yellow or may be painted grey with yellow disc on body.	Olive drab - may have yellow band around nose.
10	LENGTH OF TAIL	3.0 inches	3.0 inches
11	WIDTH OF TAIL	2.06 inches	3.0 inches
12	MATERIAL OF TAIL	Sheet steel.	Sheet steel.
13	CONSTRUCTION OF TAIL	Eight vanes welded to tail cone which, in turn, is welded to body. Vanes are welded on cone at ten degree angle from the longitudinal axis.	
14	WEIGHT OF TAIL		
15	TYPE OF FILLING	Granular T.N.T.	T.N.T.
16	WEIGHT OF FILLING	1.0 pounds	2.0 pounds
17	TOTAL WEIGHT OF BOMB	2.8 pounds	5.5 pounds
18	CHARGE / WEIGHT RATIO	36.0 %	36.0 %

CONFIDENTIAL COPY NO.___

BOMB DATA FILE NO.: 1141.A1

NATIONALITY: U.S. NAVY	INFORMATION DATE: September 1943
SIZE: (A) 3 lb. (B) 3 lb.	TYPE: (A) Drift Signal (B) Float Signal
TARGET: Used for marker.	FUZES:

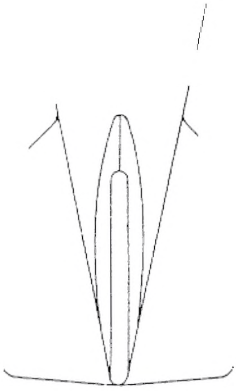

2638

CONFIDENTIAL COPY NO. 2638

BOMB DATA FILE NO.: 1141.A1

NATIONALITY: U.S. NAVY	INFORMATION DATE: September 1943
SIZE: (A) 3 lb. (B) 3 lb.	TYPE: (A) Drift Signal (B) Float Light
TARGET: Used for marker.	FUZES:

	DATA	Drift Signal	Float Light
1	OVERALL LENGTH	10.0 inches	13.0 inches
2	LENGTH OF BODY		9.3 inches
3	DIAMETER OF BODY	3.5 inches (widest part)	2.9 inches
4	THICKNESS OF WALL	1/16 inch (approx.)	
5	MATERIAL OF WALL	Molded paper pulp.	White pine.
6	CONSTRUCTION OF BODY	This signal is constructed in one piece with the vanes molded integral with the body.	A 2.7 inch phosphorus bronze nose screws on to the white pine body.
7	COLOR & MARKINGS ON BOMB AND TAIL	Probably unpainted.	White pine body is shellacked.
8	LENGTH OF TAIL		3.25 inches
9	WIDTH OF TAIL		2.25 inches
10	MATERIAL OF TAIL	Molded paper pulp.	Aluminum alloy.
11	CONSTRUCTION OF TAIL	Vanes molded integral with body.	Four vanes bolted to wooden body.
12	WEIGHT OF TAIL		
13	TYPE OF FILLING	Bronze powder.	Red phosphorus.
14	WEIGHT OF FILLING	2 lbs.	
15	TOTAL WEIGHT OF BOMB	3 lbs. (approx.)	3 lbs. (approx.)
16	REMARKS	1. The body of the drift signal breaks upon impact allowing bronze powder to spread over surface of water where it is visible from the aircraft. 2. In the float light Mk. IV, the striker is forced against the cap on impact with the water. This ignites a length of safety fuse which in turn ignites a starter composition and the pyrotechnic filler (mainly red phosphorus). The filler burns and sends flame out through the opening in the rear of the bomb for 4 or 5 minutes. The Mk. V is similar to the Mk. IV except that the former is about 18.8 inches long and burns for about 12 minutes.	

[redacted] COPY NO. ____________

BOMB DATA FILE NO.: 1191.12

NATIONALITY: U.S. NAVY	INFORMATION DATE: September 1943
SIZE: 3 lb. Mark III, IV and V Mod. 1 3 lb. Mark XXIII 13 lb. Mark XIX Mod. 1	TYPE: Miniature Practice Bombs
TARGET: Used for training of bombing crews.	FUZE: Mark IV Signal Cartridge (See Remarks)

3 lb.

13 lb.

2638

[redacted] COPY NO.

BOMB DATA FILE NO.: 1186.21

NATIONALITY: U.S. NAVY	INFORMATION DATE: September 1943
SIZE: 1000 lb. Mark XIII 1600 lb. Mark XII Mod. 1	TYPE: Aircraft Mine
TARGET: Used against shipping, submarines, etc.	FUZES: Hydro-statically armed magnetic firing mechanism

	DATA	1000 lb. Mark XIII	1600 lb. Mark XII Mod. 1
1	OVERALL LENGTH	67.6 inches	130.9 inches
2	LENGTH OF BODY	48.5 inches (approx.)	
3	DIAMETER OF BODY	19.9 inches	20.8 inches
4	THICKNESS OF WALL	7/64 inch (approx.)	
5	MATERIAL OF WALL	Steel	
6	CONSTRUCTION OF BODY	Hemispherical nose welded to tubular body; rear cap screws on the body.	
7	TYPE OF SUSPENSION	Three sets of double lugs; two sets being located 45 degrees on either side of the center set.	
8	CONSTRUCTION OF SUSPENSION LUG		
9	COLOR & MARKINGS ON BOMB AND TAIL	Black	Black
10	LENGTH OF TAIL	24.25 inches	
		25.25 inches	
12	MATERIAL OF TAIL	Sheet metal	Aluminum alloy parachute container.
13	CONSTRUCTION OF TAIL	4 Vanes folded longitudinally in "V" shape and welded to tail piece which is welded to body.	
	WEIGHT OF TAIL		
		T.N.T.	T.N.T.
16	WEIGHT OF FILLING	650 lbs.	1126 lbs.
17	TOTAL WEIGHT OF BOMB	1029 lbs.	1660 lbs.
18	CHARGE/WEIGHT RATIO	63 %	68 %
19	REMARKS	The clock in these mines, started by a hydrostatic clock-starter after mine has reached a depth of 15 feet in water, arms the magnetic-influenced firing mechanism in about 45 minutes.	

[redacted] COPY NO.

BOMB DATA	FILE NO.: 1192.A1
NATIONALITY: U.S. NAVY	INFORMATION DATE: September 1943
SIZE: 100 lb. Mk. VII 100 lb. Mk. XV	TYPE: Practice Bomb
TARGET: Used for practice bombing only	FUZE: No fuzes are used.

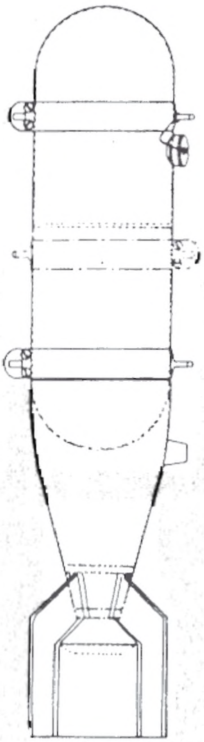

Mark XV

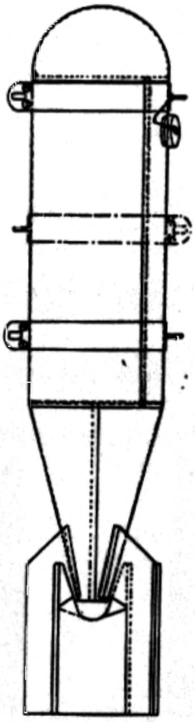

Mark VII

2638

[redacted] COPY NO.

BOMB DATA [redacted] .: 1192.A1

NATIONALITY: U.S. NAVY	INFORMATION DATE: September 1943
SIZE: 100 lb. Mk. VII 100 lb. Mk. XV	TYPE: Practice Bomb
TARGET: Used for practice bombing only	FUZE: No fuzes are used.

	DATA	100 lb. Mk. VII	100 lb. Mk. XV
1	OVERALL LENGTH	41.2 inches	41.2 inches
2	LENGTH OF BODY	23.2 inches	25.2 inches
3	DIAMETER OF BODY	8.0 inches	8.0 inches
4	THICKNESS OF WALL	.03 inches	.05 inches
5	MATERIAL OF WALL	Sheet Steel	Sheet Steel
6	CONSTRUCTION OF BODY	These bombs consist of a sheet steel nose welded to a sheet steel cylinder.	
7	TYPE OF SUSPENSION	These bombs are suspended horizontally.	
8	CONSTRUCTION OF SUSPENSION LUG	Two lugs on suspension bands; one lug on opposite side 180 degrees removed which is on a third suspension band.	
9	COLOR & MARKINGS ON BOMB AND TAIL	These bombs are coated with black paint or varnish. The nature of the filling (water or wet sand) is stencilled on the side of the body.	
10	LENGTH OF TAIL	10.8 inches	
11	WIDTH OF TAIL	10.74 inches	
12	MATERIAL OF TAIL	Sheet Steel.	
13	CONSTRUCTION OF TAIL	Four vanes welded to cone which in turn is welded to body.	Four vanes spot-welded to cone which in turn is spot-welded to body.
14	WEIGHT OF TAIL		
15	TYPE OF FILLING	These bombs are filled with either water or wet sand. No spotting charge is used.	
16	WEIGHT OF FILLING	Water - 37.5 lbs.	Water - 40.0 lbs.
17	TOTAL WEIGHT OF BOMB	Water filled - 48.5 lbs. Wet sand filled - 83.0 lbs.	Water filled - 57.0 lbs.
18	TOTAL WEIGHT OF BOMB		
19	REMARKS	(1) The filling cap is located 7 inches aft of the nose. (2) The Mk. XV Mod. 1 is similar to the Mk. XV except the filling cap is at the end of the nose. (3) The Mk. XV Mod. 2 is similar to the Mk. XV Mod. 1 except that it has a three piece welded body construction.	

[redacted] COPY NO.

BOMB DATA FILE NO.: 1194.A1

NATIONALITY: U.S. NAVY	INFORMATION DATE: September 1943
SIZE: 500 lb. Mark V 500 lb. Mark XI 500 lb. Mark XXI	TYPE: Practice Bombs
TARGET: Used for practice bombing only	FUZES: No fuzes used.

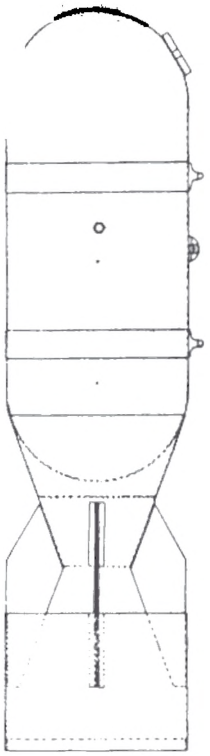

[redacted] COPY NO.

BOMB DATA FILE NO.: .191.A2

NATIONALITY: U.S. NAVY	INFORMATION DATE: September 1943
SIZE: 3 lb. Mark III, IV and V Mod. 1 3 lb. Mark XXIII 13 lb. Mark XIX Mod. 1	TYPE: Miniature Practice Bombs
TARGET: Used for training of bombing crews.	FUZE: Mark IV Signal Cartridge (See Remarks)

	DATA	Mks. III, IV, V & XXIII	13 lb. Mark XIX
1	OVERALL LENGTH	8.25 inches	13.0 inches
2	LENGTH OF BODY	5.25 inches	10.1 inches
3	DIAMETER OF BODY	(max.) 2.18 inches	2.6 inches
4	THICKNESS OF WALL		
5	MATERIAL OF WALL	Mks. III, IV & V:- Zinc base alloy. Mk. XXIII:- Cast iron.	Lead and antimony.
6	CONSTRUCTION OF BODY	The bodies of all of these bombs are single-piece alloy castings with a central hole approximately 0.86 inch in diameter the entire length of the bomb to receive the simple mechanical fuse in the nose and the Mk. IV Signal cartridge behind this. The tail fins of the 3 lb. Mk. III and IV are of sheet steel being placed in the mold at the time the body is cast, thus becoming an integral part of the body. The tail fins of the 13 lb. Mk 19 are not cast with the body but instead are cast separately and welded to the body.	
7	COLOR & MARKINGS ON BOMB AND TAIL	All of the 3 lb. practice bombs are unpainted. The 13 lb. Mk. XIX may be unpainted or may be painted black.	
8	LENGTH OF TAIL	3.0 inches	2.9 inches
9	WIDTH OF TAIL	Mks. III, V & XXIII - 2.5" Mk. IV - 2.7 inches	
10	MATERIAL OF TAIL	Mks. III & IV - Sheet steel Mk. V - Zinc base alloy. Mk. XXIII - Cast iron.	Lead and antimony.
11	CONSTRUCTION OF TAIL	See Item 6 above.	See Item 6 above.
12	WEIGHT OF TAIL		
13	TYPE OF FILLING	These bombs use only the Mk. IV Signal Cartridge.	
14	TOTAL WEIGHT OF BOMB	Mk. III & V - 2.6 lbs. Mk. IV - 2.8 lbs. Mk. XXIII - 3.0 lbs.	13.0 lbs.
	REMARKS	The Mark IV practice signal cartridge is an extra long 10-gauge shot gun shell which is inserted in nose of bomb. On impact the cartridge is fired, expelling a large puff of black smoke from tail of bomb. The firing device consists of two shallow cups seperated by a spacer, the firing pin extending through the bottom of one cup. On impact, the cups are forced toward the cartridge and the cup with the firing pin collapses allowing the pin to strike the primer cap. The Mark V signal assembly is similar except that the metal parts are stronger. The firing mechanism in the Mark V Mod. 1 is more sensitive than in other marks. The 3 lb. Mark III Mod. 1 and Mark IV are obsolete; however there are still several in the field.	

2638

COPY NO. ______

BOMB DATA [redacted] FILE NO.: 1194.A1

NATIONALITY: U.S. NAVY	INFORMATION DATE: September 1943
SIZE: 500 lb. Mark V 500 lb. Mark XI 500 lb. Mark XXI	TYPE: Practice Bombs
TARGET: Used for practice bombing only.	FUZES: No fuzes used.

	DATA	500 lb. Mark V	500 lb. Mark XI	500 lb. Mark XXI
1	OVERALL LENGTH	67.25 inches	61.75 inches	61.75 inches
2	LENGTH OF BODY	44.25 inches	37.5 inches	39.3 inches
3	DIAMETER OF BODY	16.0 inches	15.0 inches	15.0 inches
4	THICKNESS OF WALL		.	.05 inch
5	MATERIAL OF WALL	Sheet steel.	Sheet steel.	Sheet steel.
6	CONSTRUCTION OF BODY	This bomb consists of steel tube cylinder to which is welded a nose piece.		This bomb is of a one piece construction with hemi-spherical ends.
7	TYPE OF SUSPENSION	These bombs are suspended horizontally.		
8	CONSTRUCTION OF SUSPENSION LUG	These bombs have two lugs which are on suspension bands. The Mark XI may have trunnions welded to a rod extending through bomb body; the Mark XXI may have trunnions that screw on.		
9	COLOR & MARKINGS ON BOMB AND TAIL	These bombs are painted black.		
10	LENGTH OF TAIL	23.0 inches	24.2 inches	27.8 inches
11	WIDTH OF TAIL	21.35 inches	20.8 inches	15.0 inches
12	MATERIAL OF TAIL			
13	CONSTRUCTION OF TAIL	Four vanes are welded to the tail cone which in turn is welded to the body.		
14	WEIGHT OF TAIL			
15	TYPE OF FILLING	Water or wet sand.		Wet sand.
16	WEIGHT OF FILLING	Water - 286 lbs. Wet Sand - 426 lbs.	Water - 222 lbs. Wet Sand - 402 lbs.	431.4 lbs.
17	TOTAL WEIGHT OF BOMB	360 lbs. (Water filled) or 500 lbs. (filled with wet sand).	268 lbs. (Water filled) or 448 lbs. (filled with wet sand).	489.0 lbs.
18	REMARKS	1. These bombs do not use a spotting charge. 2. The Mark V and the Mark XI are obsolete; however there are still a number of these bombs out in the field. 3. The Mark XI, Model 1 is similar to the Mark XI except that the former is three piece welded.		

[redacted] COPY NO.

BOMB DATA FILE NO.: 1195.A1

NATIONALITY: U.S. NAVY	INFORMATION DATE: September 1943
SIZE: 1000 lb. Mk. VII 1000 lb. Mk. XXII	TYPE: Practice Bomb
TARGET: Used for practice bombing only.	FUZE: No fuzes are used.

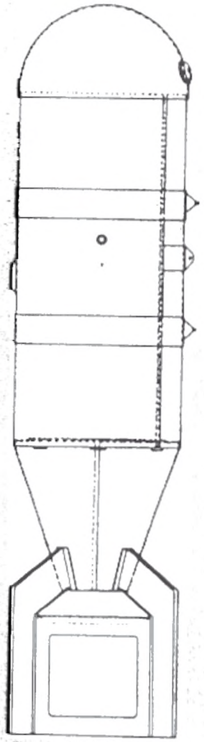

[redacted] COPY NO.

BOMB DATA FILE NO.: 1195.A1

NATIONALITY: U.S. NAVY	INFORMATION DATE: September 1943
SIZE: 1000 lb. Mk. VII 1000 lb. Mk. XXII	TYPE: Practice Bomb
TARGET: Used for practice bombing only.	FUZE: No. fuzes are used.

	DATA	Mk. VII	Mk. XXII
1	OVERALL LENGTH	80.0 inches	79.0 inches
2	LENGTH OF BODY	48.7 inches	50.0 inches
3	DIAMETER OF BODY	19.0 inches	19.0 inches
4	THICKNESS OF WALL	0.08 inch	
5	MATERIAL OF WALL	Sheet steel.	Sheet steel.
6	CONSTRUCTION OF BODY	A sheet steel nose is welded to a tubular sheet steel body.	This bomb is constructed in one piece with hemi-spherical ends.
7	TYPE OF SUSPENSION	Horizontal.	Horizontal.
8	CONSTRUCTION OF SUSPENSION LUG	Two suspension lugs welded on body; trunnions welded to rod which runs through body.	Two lugs on bands; trunnions are screwed on.
9	COLOR & MARKINGS ON BOMB AND TAIL	These bombs are painted black; the filling is stencilled on side of bomb body.	
10	LENGTH OF TAIL	31.3 inches	35.3 inches
11	WIDTH OF TAIL	26.6 inches	19.0 inches
12	MATERIAL OF TAIL	Sheet steel.	Sheet steel.
13	CONSTRUCTION OF TAIL	Four vanes are welded to tail cone which in turn is welded to bomb body.	
14	WEIGHT OF TAIL		
15	TYPE OF FILLING	Water or wet sand.	Wet sand.
16	WEIGHT OF FILLING	Water - 450 lbs. Wet sand - 870 lbs.	878.[illegible] lbs.
17	TOTAL WEIGHT OF BOMB	Water filled 580 lbs. Wet sand filled 1000 lbs.	1013.7 lbs.
18	CHARGE / WEIGHT RATIO		
19	REMARKS	(1) These bombs do not have a spotting charge. (2) The Mk. VII Mod. 1 is similar to the Mk. VII. (3) The Mk. XXII is gradually replacing the Mk. VII which is becoming obsolete; however there are still a number of these bombs in the field.	

[redacted]

DEPTH BOMBS

INTRODUCTION

The depth bomb was originally designed with the round nose. In actual usage, it was found that the underwater trajectory of this bomb was not satisfactory, consequently the flat nose attachment was developed. The flat nose attachment is in the shape of a bucket and fits down under the nose of the bomb. The vacant spaces are then filled with plaster of paris. When this attachment is filled, the weights of the bombs increase from the 325 lb. bombs by 44 lbs. and the 650 lb. bombs by 72 lbs.

At the outset the flat nose attachments were manufactured separately and sent out to be placed on the depth bombs already in the field. At about the same time the depth bombs were being manufactured with the attachment on them. Subsequently the depth bomb was redesigned so that the actual bomb case was flat thereby eliminating the necessity of the attachment.

The new design with the flat nose is designated as the AN Mark 41, AN Mark 47, Mark 38, and Mark 49.

Some of the round nose depth bombs are still being manufactured and a small supply kept on hand at the Navy ammunition depots. However, the large majority of depth bombs will either have flat nose attachments or will be built with the flat nose.

Due to the air currents around the flat nose of the bomb, the nose fuzes have difficulty in arming. The AN M 103 will not arm on the flat nose, The AN Mark 219 will arm with difficulty at 2500 feet. The AN-M 103 is now being designed with wider arming vanes and a pitch of 30 degrees. This new design of the fuze will permit it to arm on the flat nose.

The depth bombs are primarily filled with T.N.T., however, the 350 lb. AN-Mark 47 and 700 lb. Mark 49 are filled with Torpex. It is believed that Torpex gives greater force of blast in detonation.

DEPTH BOMB DATA [redacted] FILE NO. COPY NO.

NATIONALITY: U.S. Navy	INFORMATION DATE Sept. 1943
SIZE: 650 lb Mark 29 650 lb Mark 37	TYPE: Depth Bombs.
TARGET: Submarine or light surface ships.	

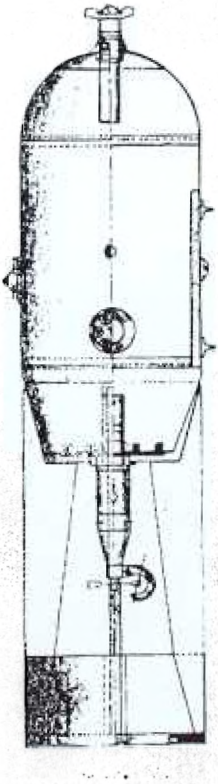

DEPTH BOMB DATA [redacted] COPY NO. FILE NO.

NATIONALITY: U.S. Navy	INFORMATION DATE Sept. 1943
SIZE: 650 lb Mark 29 650 lb Mark 37	TYPE: Depth Bombs.

TARGET: Submarine or light surface ships.

FUZES:

NOSE: AN-MK 219 - Insert auxiliary booster and use MK-19 adapter ring. Fuse will not arm under 2500 ft. if flat nose attachment is used.
AN-M 103 - Will not arm on flat nose. Fuze is now being modified so it will arm on flat nose.
MK-221 - Short delay

ATHWARTSHIP: AN-MK 224 (Hydrostatic fuze)

TAIL: AN-MK 229 (Hydrostatic fuze)

DATA	Mark 29	Mark 37
1. OVERALL LENGTH	70 inches	63 inches
2. LENGTH OF BODY	41 "	41 "
3. DIAMETER OF BODY	17.7 "	17.7 "
4. THICKNESS OF WALL	.12 "	.12 "
5. MATERIAL OF WALL	Constructed of sheet steel	

6. CONSTRUCTION OF BODY The nose is manufactured with a hemispherical nose which is reinforced with steel disc. The suspension lugs are reinforced with a steel strip.

7. SUSPENSION: The ordinary suspension lugs are mounted with the suspension bracket 180 degrees removed. There are two threaded holes at 180 degrees apart to receive the trunion lugs which are used for suspension on the dive bomber.

8. COLOR AND MARKINGS This bomb is painted light grey with a 11 inch yellow disc between the two suspension lugs.

9. LENGTH OF TAIL	36 inches	29 inches
10. WIDTH OF TAIL	17.7 "	17.7 "
11. MATERIAL OF TAIL	Sheet steel	

12. CONSTRUCTION OF TAIL On the mark 29, it was found that the AN-Mk 29 tail fuze had difficulty in arming due to the length of the tail fins. Therefore the Mark 37 was manufactured with the tail 7 inches shorter. The construction is the same on each one - four vanes welded to the tail cone which is secured to the body by locking nut screwing onto the rear of the body. Circular strut at rear of vanes.

13. TYPE OF FILLING	T.N.T.	T.N.T.
14. WEIGHT OF FILLING	464 lbs.	464 lbs.
15. TOTAL WEIGHT	657 lbs.	657 lbs.

DEPTH BOMB DATA [redacted] COPY NO. FILE NO.

NATIONALITY: U.S. Navy	INFORMATION DATE Sept. 1943
SIZE: 650 lb. Mark 29 650 lb. Mark 37	TYPE: Depth Bombs

TARGET: Submarine or light surface ships.

16. CHARGE WEIGHT/RATIO	70%	70%

17. REMARKS: These two depth bombs have not yet been standardized. Flat nose attachments are manufactured and sent to the field to attach to these bombs.

[redacted] COPY NO.

DEPTH BOMB DATA FILE NO.

NATIONALITY: U.S. Navy	INFORMATION DATE: Sept. 1943
SIZE: 650 lb. Mark 38 700 lb. Mark 49	TYPE: Depth Bombs

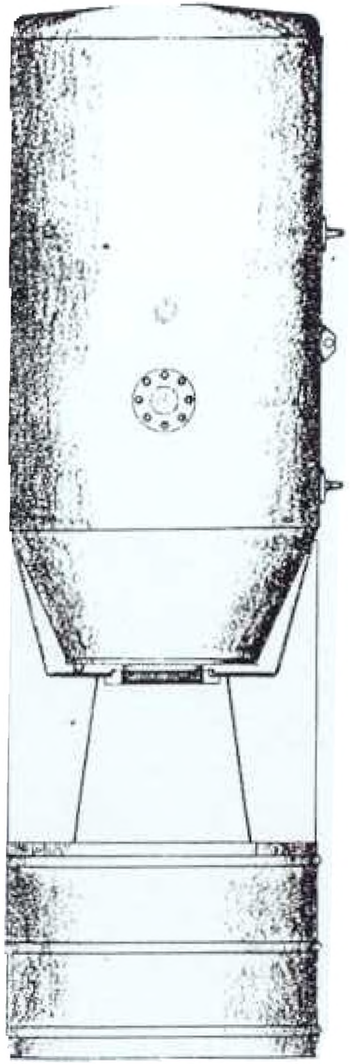

[redacted] COPY NO._

BOMB DATA FILE NO.:

NATIONALITY: U.S. NAVY	INFORMATION DATE: Sept. 1943
SIZE: 100 lb. Mk 42	TYPE: Gas
TARGET: Personnel & Materiel	FUZE: Mk 119

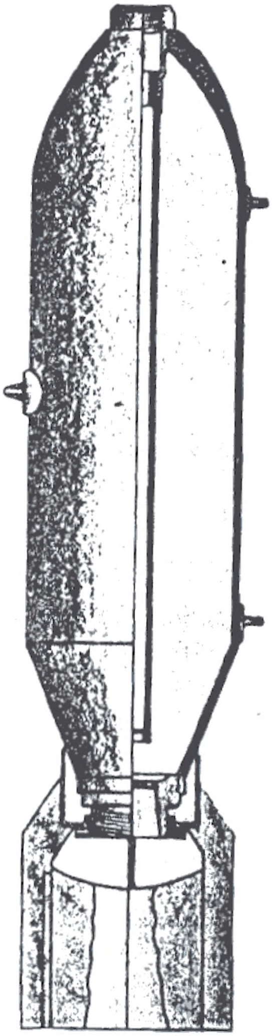

2638

[redacted]

COPY NO.

BOMB DATA

FILE NO.:

NATIONALITY: U.S. NAVY	INFORMATION DATE: Sept. 1943
SIZE: 100 lb. Mk 42	TYPE: Gas
TARGET: Personnel & Materiel	FUZE: Mk 119

	DATA	
1	OVERALL LENGTH	39.43 inches
2	LENGTH OF BODY	27.70 inches
3	DIAMETER OF BODY	8.0 inches
4	THICKNESS OF WALL	0.175 inch
5	MATERIAL OF WALL	Steel.
6	CONSTRUCTION OF BODY	Steel tube, swagged aft. An adapter screws into the nose and is threaded to receive the fuze. A burster tube running the length of the bomb body screws into the after end of the adapter. The after end of the body is closed by a male base plate, which is threaded for the tail assembly to be fitted.
7	TYPE OF SUSPENSION	Horizontal.
8	CONSTRUCTION OF SUSPENSION LUG	Two lugs 14 inches apart, equidistant from center of gravity. One lug on other side of bomb, located at center of gravity.
9	COLOR & MARKINGS ON BOMB AND TAIL	Olive drab overall with two green bands 1/2 inch wide and 1/2 inch apart aft of the nose.
10	LENGTH OF TAIL	9.468 inches
11	WIDTH OF TAIL	11.0 inches
12	MATERIAL OF TAIL	Sheet steel.
13	CONSTRUCTION OF TAIL	Box type, four fin tail.
14	WEIGHT OF TAIL	
15	TYPE OF FILLING	TNT (granulated) burster; H.S. filler.
16	WEIGHT OF FILLING	75 lbs. TNT; 40.50 lbs. H.S.
17	TOTAL WEIGHT OF BOMB	92.0 lbs.
18	CHARGE / WEIGHT RATIO	44%
19	REMARKS	

[redacted]

BOMB DATA

COPY NO.
FILE NO. 1182.A1

NATIONALITY: U.S. Navy	INFORMATION DATE: September 1945
SIZE: 65 lb. Mk 5 - 7	TYPE: A.S. Projector charge (mousetrap)
TARGET: For use by Patrol Vessels against submarines	FUZE: Mk 31-1, Mk 35, Mk 40

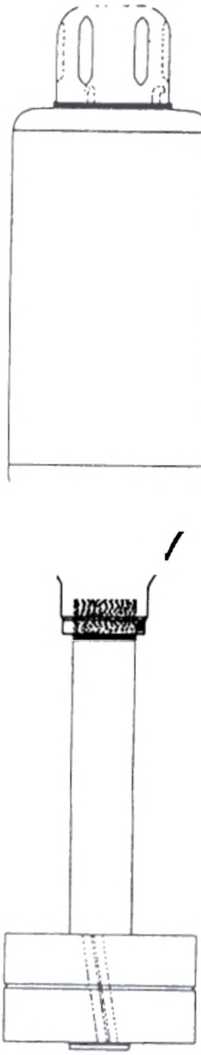

2 6 3 8

[redacted] COPY NO.

DEPTH BOMB DATA FILE NO.

NATIONALITY: U.S. Navy	INFORMATION DATE: Sept. 1943
SIZE: 650 lb. Mark 38 700 lb. Mark 49	TYPE: Depth Bombs

TARGET: Used against light surface vessels and primarily against submarines.

FUZES:

NOSE:
AN-MK 219 - When used, it is necessary to use the auxiliary booster and the MK-19 adapter. This fuse will not arm if dropped under 2500 ft.
AN-M 103 - This fuse will not arm - do not use until the modified arming vanes are available.
AN-MK 221 - Arms with difficulty.

ATHWARTSHIP:
AN-M 224 (Hydrostatic fuze)

TAIL: AN-MK 229 (Hydrostatic fuze)

DATA	Mark 38	Mark 49
1. OVERALL LENGTH	58.5 inches	58.5 inches
2. LENGTH OF BODY	36.4 "	36.4 "
3. DIAMETER OF BODY	18.2 "	18.2 "
4. THICKNESS OF WALL	.12 "	.12 "
5. MATERIAL OF WALL	Sheet Steel	Sheet Steel

6. CONSTRUCTION OF BODY — The body is constructed in three pieces. The center piece is sheet steel; the flat nose is welded on and the tail piece is welded on. The suspension lugs are reinforced with a strip of sheet steel.

7. SUSPENSION: The usual suspension lugs are used with the suspension bracket 180 degrees removed. Threaded holes are on each side to receive the trunion lugs for dive bomber use.

8. COLOR	Olive drab with dotted yellow line around axis of bomb.	
9. LENGTH OF TAIL	29.0 inches	
10. WIDTH OF TAIL	17.7 "	
11. MATERIAL OF TAIL	Sheet steel	
12. CONSTRUCTION OF TAIL	Four vanes supported by a circular strut.	
13. TYPE OF FILLING	T.N.T.	Torpex
14. WEIGHT OF FILLING	425 lbs	494 lbs
15. TOTAL WEIGHT OF BOMB	633 "	700 "
16. CHARGE WEIGHT/RATIO	67%	67%

17. REMARKS — These two bombs have not been made Army-Navy Standard as yet.

BOMB DATA [redacted] COPY NO.
FILE NO. 1182.A1

NATIONALITY: U.S. Navy	INFORMATION DATE: September 194
SIZE: 65 lb. Mk 5 - 7	**TYPE: A.S. Projector charge (mousetrap)**
TARGET: For use by Patrol Vessels against submarines	**FUZE: Mk 31-1, Mk 35, Mk 40**

DATA	MK 5	MK 7
1. OVERALL LENGTH (with fuze & Motor)	38.59"	
2. LENGTH OF BODY	19.718"	
3. DIAMETER OF BODY	7.187"	
4. THICKNESS OF WALL		
5. MATERIAL OF WALL	Steel	

6. CONSTRUCTION OF BODY & ACTION — The projectile consists of a flat nosed body with a conical tail fairing and parallel sides amidships. The adapter and fuze threads into the nose and the motor unit threads into the base of the unit. The motor unit contains a long single pellet of smokeless powder which when ignited burns at a pressure of 1000 to 2500 lbs. per sq. in. The gases are forced out aft thru the nozzle in the rear end of the motor tube. The unit is thus propelled forward by the reaction of the emitted gases upon the motor. The propulsion is completely independent of any agent which would introduce a recoil problem. The burning continues for 3 seconds during which time the missile travels about 30 feet, at which point propulsion ceases and the projectile is free in flight.
This projector charge is intended for use on the Mk 20, 21 and 22 Anti-submarine projectors.

7. TYPE OF SUSPENSION	Projected by firing electrically from guide racks aboard ships.
8. CONSTRUCTION OF SUSPENSION LUG	None
9. COLOR AND MARKINGS ON BOMB AND TAIL	Grey body and tail. "A together with anchor, symbol and inspector's in black.
	16.50"
	7.0"
	Sheet Steel
	Steel tube attached to body by a threaded joint. Tail fins with a circular drum attached to the after end to give stabalized trajectory. The vanes have a 10 degree twist to give a slow rotation and prevent ruddering.
	9.32 lbs.

		Mk 7
		Torpex
		33.4 lb(Approx)

[redacted] COPY NO.

BOMB DATA FILE NO. 1162.A1

NATIONALITY: U.S. Navy	INFORMATION DATE; September 1943	
SIZE: 65 lb. Mk 5 -7	TYPE A.S. Projector charge (mousetrap)	
17. TOTAL WEIGHT OF BOMB	Mk 5 64.53 lbs	Mk 7 68.03 lbs
18. CHARGE/WEIGHT RATIO	48.2%	49.1%
19. REMARKS: The propellant charge is ignited by a black powder primer, which is fired by an electric squib. The wiring passes from the primer aft to the tail vanes where the contact is made with the two contact rings which act as the vane supports as well as the firing contacts.		

BOMB DATA [redacted] COPY NO.
FILE NO. 1182.A1

NATIONALITY: U.S. Navy	INFORMATION DATE: September 1943
SIZE: 65 lb. Mk 6 & Mk 8	**TYPE: A.S. Projector charge (hedgehog)**
TARGET: For use by Patrol vessels against submarines.	**FUZE: Mk 36 or Mk 40**

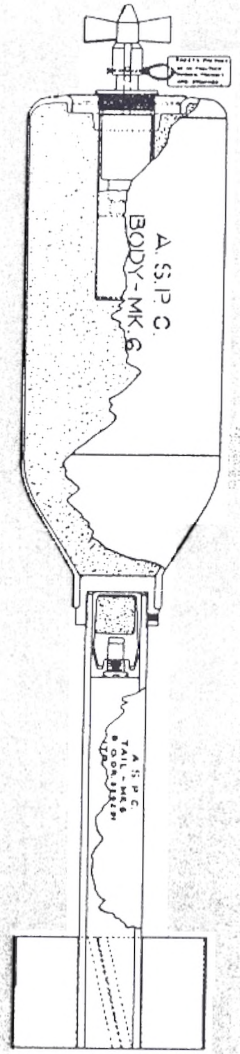

2638

COPY NO.

BOMB DATA [redacted] FILE NO. 1162.A1

NATIONALITY: U.S. Navy	INFORMATION DATE: September 1943	
SIZE: 65 lb. Mk 6 & Mk 8	TYPE: A.S. Projector charge (hedgehog)	
TARGET: For use by Patrol vessels against submarines.	FUZE: Mk 36 or Mk 40	
DATA	Mk 6	Mk 8
1. OVERALL LENGTH	38.31"	
2. LENGTH OF BODY	19.72"	
3. DIAMETER OF BODY	7.187"	
4. THICKNESS OF WALL		
5. MATERIAL OF WALL	Steel	

6. CONSTRUCTION OF BODY AND OPERATION The projectile consists of a flat nosed body with a conical tail fairing and parallel sides. The adapter and fuze thread into the nose. The motor unit consists of a smokeless powder cartridge with primer which is lodged forward in the tail tube. The tube is fitted over the firing peg when a salvo is to be fired. The primer is detonated by electric contacts in the peg, resulting in firing the cartridge which propels the charge of the projector. This projector charge is adapted for use on the anti-submarine projector Mark 10.

7. TYPE OF SUSPENSION	Projected by firing electrically from contact pins aboard ships.	
8. CONSTRUCTION OF SUSPENSION LUG	None	
9. COLOR & MARKINGS ON BOMB AND TAIL	Body and Tail - grey; "ASPC Body Mk 6", together with anchor, Mfr's and inspector's symbols stencilled in black.	
10. LENGTH OF TAIL	16.50"	
11. WIDTH OF TAIL	7.0"	
12. MATERIAL OF TAIL	Steel	
13. CONSTRUCTION OF TAIL	Steel tube attached to body by a threaded joint. Tail fins have a 10 degree twist are attached with a drum support in order to give a slow rotation and stabalized trajectory.	
14. WEIGHT OF TAIL	9.32 lbs.	
	Mk 6	Mk 8
15. TYPE OF FILLING	T.N.T.	Torpex
16. WEIGHT OF FILLING	31.59 lb. (App)	33.09 lb. (App)
17. TOTAL WEIGHT OF BOMB	65.49 lbs	68.99 lbs.
18. CHARGE/WEIGHT RATIO	48.23%	47.96%
19. REMARKS		

[redacted]

BOMB DATA — FILE NO.: 1112.C1 — COPY NO. ____________

NATIONALITY: U.S. ARMY	INFORMATION DATE: SEPT. 1943
SIZE: 20 lb. AN-M 41 23 lb. AN-M 40	TYPE: Fragmentation (Anti-personnel)
TARGET: Personnel, motor convoys, airplanes on the ground, etc. For M 40: Used against ground targets by airplanes flying at low altitudes.	FUZES (Nose): For M 41 - M 110 M 109 For M 40 - M 104 M 120

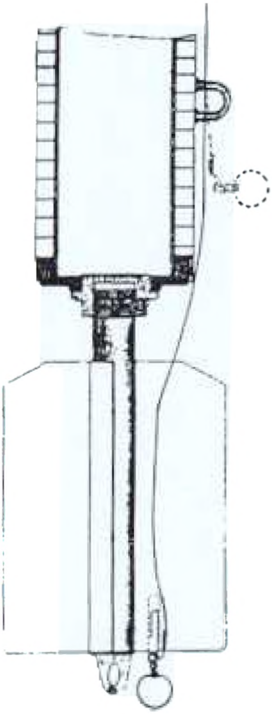

20 lb. AN-M 41

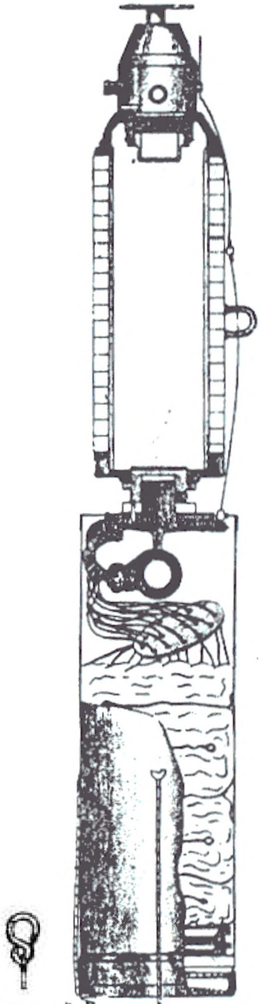

23 lb. AN-M 40

PART

SECTON C

ARMY NAVY
AND
ARMY NAVY G.P.)
BOMBS

BOMB DATA [redacted] FILE NO. COPY NO.

NATIONALITY: U.S. Army-Navy	INFORMATION DATE: Sept. 1943
SIZE: 20 lb. AN-M 41 High Level 23 lb. AN-M 40 Low Level	TYPE: Fragmentation (anti-personnel)

TARGET:	Personnel, motor convoys, airplanes on the ground etc. For AN-M 40: used against ground targets by airplanes flying at low altitudes.

FUZES

NOSE:	AN-M 41: (M 110 (M 109 AN-M 40: (M 104 (M 120

DATA	20 lb. AN-M 41	23 lb. AN-M 40
1. OVERALL LENGTH	19.5 inches	26.7 inches
2. LENGTH OF BODY	11.3 inches	11.31 inches
3. DIAMETER OF BODY	3.6 inches	3.64 inches
4. THICKNESS OF WALL	0.54 inches	0.50 inches
5. MATERIAL OF WALL	Steel tube and drawn steel wrapping.	
6. CONSTRUCTION OF BODY	These bombs are constructed of the following: 1) Cast steel nose and tail pieces; 2) A seamless steel inner tube; 3) Helically-wrapped drawn steel wire wrapping around inner tube. The tube is threaded to hold the nose and tail sections.	
7. TYPE OF SUSPENSION	These bombs may be carried horizontally, vertically, or in a cluster adapter.	
8. CONSTRUCTION OF SUSPENSION LUG	For individual suspension of these bombs a U shaped eyebolt of steel is welded to bomb at center of gravity. The AN-M 41 has an eyebolt welded to rear of tail for vertical suspension. The cluster adapter is made of sheet metal and does not use eyebolts of bombs for suspension.	
9. COLOR & MARKINGS ON BOMB AND TAIL	Prior to March 11, 1942 these bombs would have been painted yellow all over with black manufacturer's markings but since that date they will be painted olive-drab with a 1 inch yellow band around the nose and extreme rear of the bomb and a 1/4 inch band around the center of gravity.	
10. LENGTH OF TAIL	9.25 inches	13.9 inches
11. WIDTH OF TAIL	5.1 inches	4.35 inches
12. MATERIAL OF TAIL	For AN-M 41: Sheet steel and cast iron: For AN-M 40 sheet steel and parachute made of white silk.	

BOMB DATA [redacted] FILE NO. COPY NO.

NATIONALITY: U.S. Army-Navy	INFORMATION DATE: Sept. 1943
SIZE: 20 lb. AN-M 41 High Level 23 lb. AN-M 40 Low Level	TYPE: Fragmentation (anit-personnel)

13. CONSTRUCTION OF TAIL	For AN-M 41: Four rectangular sheet steel vanes welded to a length of 1 inch cast iron pipe which screws into base filling plug. The AN-M 40 is fitted with a cylindrical sheet steel parachute housing which has an end cap at the rear.

	20 lb. AN-M 41	23 lb. AN-M 40
14. WEIGHT OF TAIL	1.6 lbs	5.3 lbs
15. TYPE OF FILLING	T.N.T.	T.N.T.
16. WEIGHT OF FILLING	2.7 lbs.	2.7 lbs.
17. TOTAL WEIGHT OF BOMB	20.3 lbs.	24.1 lbs.
18. CHARGE/WEIGHT RATIO	13%	11.2%
19. REMARKS:	The AN-M 40 is a low level fragmentation bomb and should be dropped from a maximum altitude of 400 ft. The AN-M 41 is a high level fragmentation bomb and should be dropped from a minimum of 800 ft.	

2638

[redacted]

COPY NO.

BOMB DATA FILE NO.

NATIONALITY: U.S. Army-Navy	INFORMATION DATE: Sept. 1943
SIZE: 2 lb. AN-M-52	TYPE: Incendiary.
TARGET: Buildings of frame construction.	FUZES: Mechanical impact fuzes.
DATA	2 lb. AN-M-52
1. OVERALL LENGTH	14.2 "
2. LENGTH OF BODY	
3. DIAMETER OF BODY	.975 " (internal)
4. THICKNESS OF WALL	
5. MATERIAL OF WALL	Cast magnesium alloy.
6. CONSTRUCTION OF BODY	The body is a hexagonal casting of magnesium alloy with bore one inch shorter than the body length, thus making a solid nose.
7. TYPE OF SUSPENSION	These bombs do not have individual suspension lugs but are carried in clusters to wit: M-3, 100# cluster will carry 51 of these bombs. The M-3, 500# cluster will carry 192 of these bombs.
8. COLOR AND MARKINGS ON BOMB AND TAIL	This bomb may be painted either blue or grey with a purple band around the center of the body.
9. LENGTH OF TAIL	5.79 "
10. WIDTH OF TAIL	
11. MATERIAL OF TAIL	Sheet steel.
12. CONSTRUCTION OF TAIL	Tail of hexagonal sheet metal pressing secured to body with three screws.
13. TYPE OF FILLING	The filling consists of 75% Barium Nitrate, 14% grain aluminum, 5% flake aluminum 4.5% sulphur, and 1.5% castor oil.
14. WEIGHT OF FILLING	0.5 lbs.
15. TOTAL WEIGHT OF BOMB	2.0 lbs.
16. CHARGE/WEIGHT RATIO	25.0%

[redacted]

BOMB DATA — FILE NO.: 1121.D2 — COPY No. ______

NATIONALITY: U.S. ARMY-NAVY	INFORMATION DATE: Sept. 1943
SIZE: **4 lb. AN-M 54** **4 lb. AN-M 54X** **4 lb. AN-M 50A1** **4 lb. AN-M 50A1X**	**TYPE: Incendiary**
TARGET: Principally used against buildings of frame construction, or in conjunction with demolition bombs.	**FUZES: Mechanical impact tail fuze, no designation. Fuze contained in closing plug under tail.**

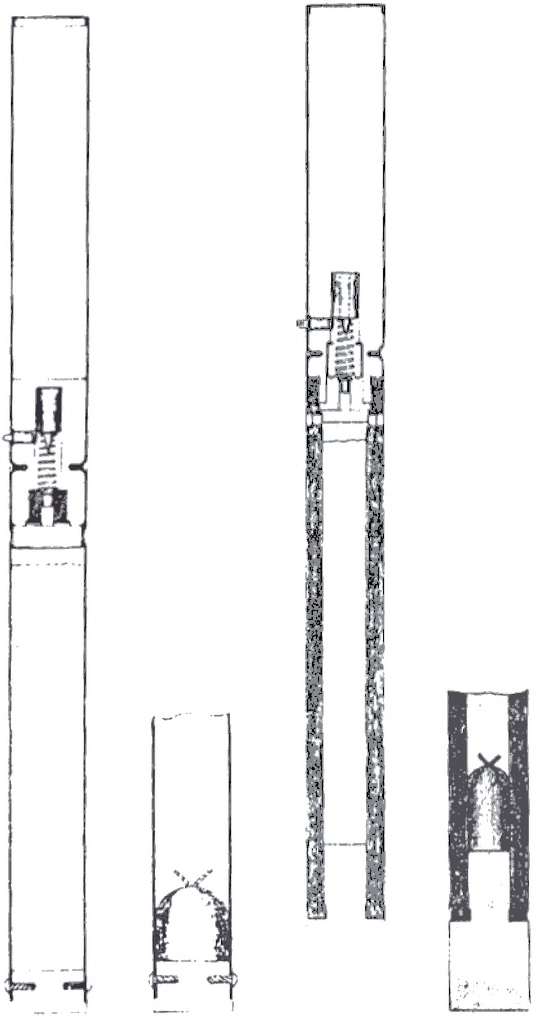

[redacted]

BOMB DATA — FILE NO. 1121.D2 — COPY NO.

NATIONALITY: U.S. Army-Navy	INFORMATION DATE: Sept. 1943
SIZE: 4 lb. AN-M-54 4 lb. AN-M-54X 4 lb. AN-M-50A1 4 lb. AN-M-50XA1	TYPE: Incendiary.

TARGET: Principally used against buildings of frame construction, in conjunction with the use of demolition bombs.

FUZES: Mechanical impact tail fuze, no designation. Fuze contained in closing plug under tail.

DATA	4 lb. AN-M-54 4 lb. AN-M-54X	4 lb. AN-M-50A1 4 lb. AN-M-50XA1
1. OVERALL LENGTH	21.35 "	21.35 "
2. LENGTH OF BODY	13.6 "	14.0 "
3. DIAMETER OF BODY	1.7 "	1.7 "
4. THICKNESS OF WALL	1/16 "	0.33 "
5. MATERIAL OF WALL	Steel tube.	Magnesium alloy.
6. CONSTRUCTION OF BODY.	Body is made of round steel tubing with hexagonal cast iron or steel nose piece.	Body is a hexagonal casting of magnesium alloy with steel plug or weight in nose.
7. TYPE OF SUSPENSION	These bombs are suspended horizontally in clusters. The M-2 100# cluster will carry 34 of these bombs. The M-6 500# cluster will carry 128 of these bombs.	These bombs are suspended horizontally in clusters. The M-1 100# cluster will carry 34 of these bombs. The M-1 500# cluster will carry 128 of these bombs.
8. COLOR & MARKINGS ON BOMB & TAIL	These bombs are normally unpainted metal but may be painted a light green to prevent oxidation during storage. A purple band around center of body denotes incendiary nature of bomb. Nose of bomb is stamped with designation and manufacturer's markings.	
9. LENGTH OF TAIL	10.0 "	8.7 "
10. WIDTH OF TAIL	1.65 " (across flats)	1.6 "
11. MATERIAL OF TAIL	Sheet Metal	Sheet Steel.
12. CONSTRUCTION OF TAIL	Tail consists of hexagonal sheet metal pressing with plate cap crimped over end.	
13. WEIGHT OF TAIL		0.01 lbs.
14. TYPE OF FILLING	Thermite. Burster charge of 170 grains of	Igniter composition first fire composition, burster

[redacted]

BOMB DATA — FILE NO. 1121.D2 — COPY NO.

NATIONALITY: U.S. Army-Navy	INFORMATION DATE: Sept. 1943
SIZE: 4 lb. AN-M-54 4 lb. AN-M-54X 4 lb. AN-M-50A1 4 lb. AN-M-50XA1	TYPE: Incendiary.

14. TYPE OF FILLING (cont'd)	black powder at nose of "X" bombs.	charge of 170 grains black powder at nose of "X" bombs.
15. WEIGHT OF FILLING	21.0 oz. 6.0 oz. igniter composition. 0.4 oz. first fire composition.	
16. TOTAL WEIGHT OF BOMB.	4.0 lbs.	4.0 lbs.
17. CHARGE/WEIGHT RATIO	40.4%	15.6%

[redacted] COPY NO.

BOMB DATA FILE NO.

NATIONALITY: U.S. Army-Navy	INFORMATION DATE: Sept. 1943
DESIGNATION: 100 lb. AN-M 30	TYPE: Demolition - H.E. Bombs (AN-M Series) (AN-M (G.P.) Series)
TARGETS: Ammunition dumps, railway engines and cars, all types of construction except skyscrapers, and airplanes on ground.	

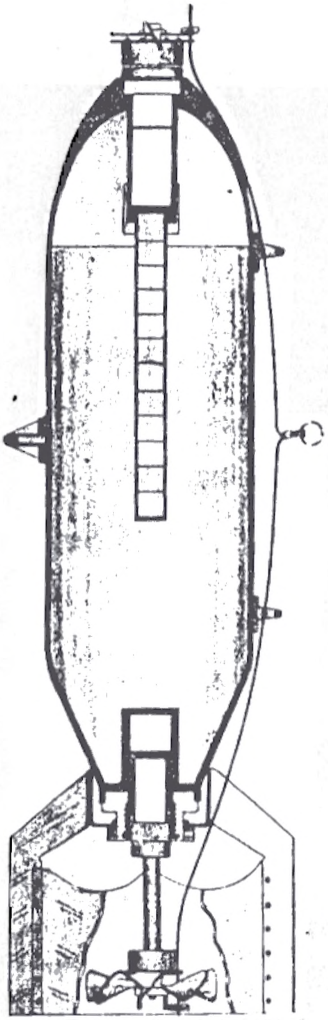

BOMB DATA [redacted] FILE NO. COPY NO.

NATIONALITY: U.S. Army-Navy	INFORMATION DATE: Sept. 1943
DESIGNATION: 100 lb. AN-M 30	TYPE: Demolition - H.E. Bombs (AN-M Series) (AN-M (G.P.) Series)

TARGETS: Ammunition dumps, railway engines and cars, all types of construction except skyscrapers, and airplanes on ground.

FUZES

REGULAR MISSIONS	
Nose:	AN-M 103, M 103
Tail:	AN-M 100A2, AN-M 100A1, M 100
SPECIAL MISSIONS	
Tail:	M-112- (Masthead bombing from land base only) AN-M-115 (Masthead bombing from carrier or land base) M-123 - Long time delay fuze against land targets)
Nose:	Where the three above fuzes are used in the tail, the shipping plug should be left in the nose until the nose fuze is developed and supplied to be used on these special missions.

DATA	100 lb. AN-M 30
1. OVERALL LENGTH	36.0 inches
2. LENGTH OF BODY	30.0 inches
3. DIAMETER OF BODY	8.2 inches
4. THICKNESS OF WALL	0.16 inches
5. MATERIAL OF WALL	Steel
6. CONSTRUCTION OF BODY	These bombs may be made by any one of the following methods: 1) from seamless steel tubing in which the nose of the bomb is formed by swaging and the tail by drawing to the necessary diameter; 2) or the case may be forged in one piece; 3) or the bomb may be formed from cast sections welded together. These bombs have male base filling plugs.
7. TYPE OF SUSPENSION	These bombs are always held horizontally.
8. CONSTRUCTION OF SUSPENSION LUG	The M Series bombs have two eyebolts welded to body along longitudinal axis of the bomb. The eyebolts are formed from bar steel, shaped in the form of a U and then welded to the bomb body.
9. COLOR & MARKINGS ON BOMB AND TAIL	Prior to March 11 1942 these bombs would have been painted yellow all over with black manufacturer's markings but since that date they will be painted olive-drab with a 1 inch yellow band around the nose and extreme rear of the bomb and a 1/4 inch

BOMB DATA [redacted] FILE NO. COPY NO.

NATIONALITY: U.S. Army-Navy	INFORMATION DATE: Sept. 1943
DESIGNATION: 100 Lb. AN-M 30	TYPE: Demolition - H.E.Bombs (AN-M Series) (AN-M (G.P) Series)

9. COLOR & MARKINGS ON BOMB AND TAIL (CONT'd)	band around the center of gravity.
10. LENGTH OF TAIL	9.75 inches
11. WIDTH OF TAIL	11.0 inches
12. MATERIAL OF TAIL	Sheet Steel
13. CONSTRUCTION OF TAIL	This type of tail consists of the following parts: 1) a cast steel sleeve secured to the body of the bomb by a fin locking nut; 2) four fins or vanes; 3) Internal box-type struts. One vane and one strut are pressed from one piece of metal and the four pieces are welded together and to the sleeve.
14. WEIGHT OF TAIL	3.5 lbs.
15. TYPE OF FILLING	A 50/50 Amatol filling with T.N.T. surrounds around the nose and tail booster sleeve to prevent exudation from Amatol during storage -recently these bombs have been filled with 100% T.N.T which will be stenciled on the bomb. This bomb contains only one built-in M-104 auxiliary booster (nose) which contains tetryl. The M-102 adapter booster (tetryl) is is built in the base plug and receives the tail fuze.

	50/50 Amatol	T.N.T.
16. WEIGHT OF FILLING	53.3 lbs	56.6 lbs
17. TOTAL WEIGHT	98.1 lbs.	100.0 lbs
18. CHARGE/WEIGHT RATIO	54.4%	56.6%

BOMB DATA [redacted] FILE NO. COPY NO.

NATIONALITY: U.S. Army Navy	INFORMATION DATE: Sept. 1943
SIZE: 250#, AN-M 57	TYPE: Demolition- H.E. Bombs (AN-M Series) (AN-M (G.P.) Series)
TARGET: Ammunition dumps, railway engines and cars, all types of construction except skyscrapers, and airplanes on ground.	

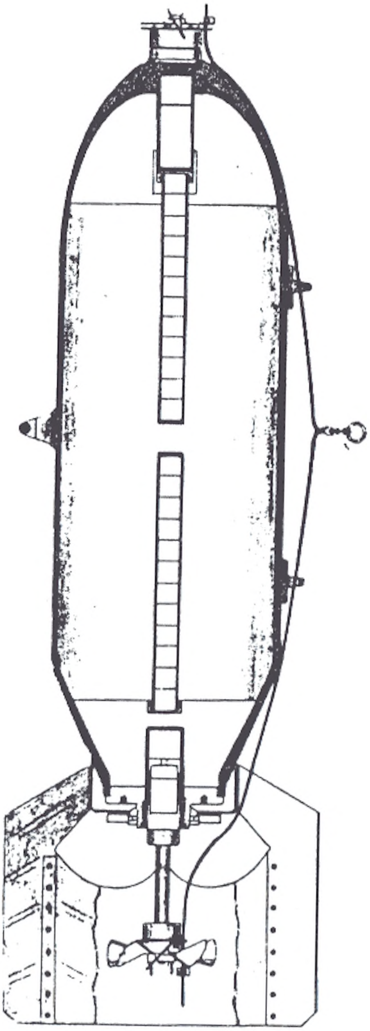

BOMB DATA [redacted] FILE NO. COPY NO.

NATIONALITY: U.S. Army Navy	INFORMATION DATE: Sept. 1943
SIZE: 250#, AN-M 57	TYPE: Demolition- H.E. Bombs (AN-M Series) (AN-M (G.P.) Series)

TARGET: Ammunition dumps, railway engines and cars, all types of construction except skyscrapers, and airplanes on ground.

FUZES

REGULAR MISSIONS

NOSE:	AN-M 103, M-103
TAIL:	AN-M 100A2, 100A1, M-100

SPECIAL MISSIONS

(1) Masthead Bombing:

NOSE:	Shipping plug, until nose fuze is developed and supplied specifically for masthead bombing.
TAIL:	M-112- Land based planes only) AN-M 115 (Carrier based or land based planes

(2) Longtime delay Fuze:

NOSE:	Shipping plug unless specifically provided with suitable fuzes.
TAIL:	M- 123

DATA	250 lb. AN-M 57
1. OVERALL LENGTH	45.4 inches
2. LENGTH OF BODY	36.6 inches
3. DIAMETER OF BODY	10.9 inches
4. THICKNESS OF WALL	0.27 inches
5. MATERIAL OF WALL	Steel
6. CONSTRUCTION OF BODY	AN bombs are constructed the same as the M Series, i.e. by 1) use of seamless steel tubing, 2) by forging or 3) by casting. The AN Series use a male type filling base plug whereas the M Series use a female type cap.
7. TYPE OF SUSPENSION	These bombs are always held horizontally.
8. CONSTRUCTION OF SUSPENSION LUG	The AN Bombs have two eyebolts welded to body along longitudinal axis of the bomb. They also have a third eyebolt welded to body at center of gravity and 180 degrees removed from other eyebolts. The eyebolts are formed from bar steel, shaped in the form of a U and then welded to the bomb body. The 500 lb AN bombs may also have trunnions on a band.

BOMB DATA [redacted] FILE NO. COPY NO.

NATIONALITY: U.S. Army-Navy	INFORMATION DATE: Sept. 1943
SIZE: 250#, AN-M 57	TYPE: Demolition - H.E. Bombs (AN-M Series) (AN-M (G.P.) Series)

9. COLOR & MARKINGS ON BOMB AND TAIL	Prior to March 11 1942 these bombs would have been painted yellow all over with black manufacturer's markings but since that date they will be painted olive-drab with a 1 inch yellow band around the nose and extreme rear of the bomb and a 1/4 inch band around the center of gravity.
10. LENGTH OF TAIL	12.1 inches
11. WIDTH OF TAIL	14.9 inches
12. MATERIAL OF TAIL	Sheet Steel
13. CONSTRUCTION OF TAIL	This type of tail consists of the following parts: 1) A cast steel sleeve secured to the body of the bomb by a fin locking nut; 2) four fins or vanes; 3) internal box-type struts. One vane and one strut are pressed from one piece of metal and the four pieces are welded together and to the sleeve.
14. WEIGHT OF TAIL	6.0 lbs
15. TYPE OF FILLING	(1) A 50/50 Amatol filling with TNT surrounds around the nose and tail booster sleeve to prevent exudation from Amatol during storage. (2) 100% T.N.T. filling. This bomb contains two built-in M-104 Auxiliary boosters (one in nose and one in tail) which contain tetryl. The M102 adapter booster (tetryl) is built in the base plug and receives the tail fuze.

	50/50 Amatol	T.N.T.
16. WEIGHT OF FILLING	113.7 lbs.	129.0 lbs
17. TOTAL WEIGHT OF BOMB	240.9 lbs.	252.0 lbs.
18. CHARGE/WEIGHT RATIO	47.0%	51.0%

[redacted]

BOMB DATA — COPY NO. / FILE NO.

NATIONALITY: U.S. Army-Navy	INFORMATION DATE Sept. 1943
SIZE: 500 lb. AN-M-43 AN-M-64 (G.P.)	TYPE: Demolition - H.E. bombs. AN-M-43 (AN-M Series) AN-M-64 (AN-M G.P. Series)
TARGET:	Ammunition dumps, airplanes, railroad tracks, engines and cars, all types of construction except skyscrapers, modern seacraft except battleships.

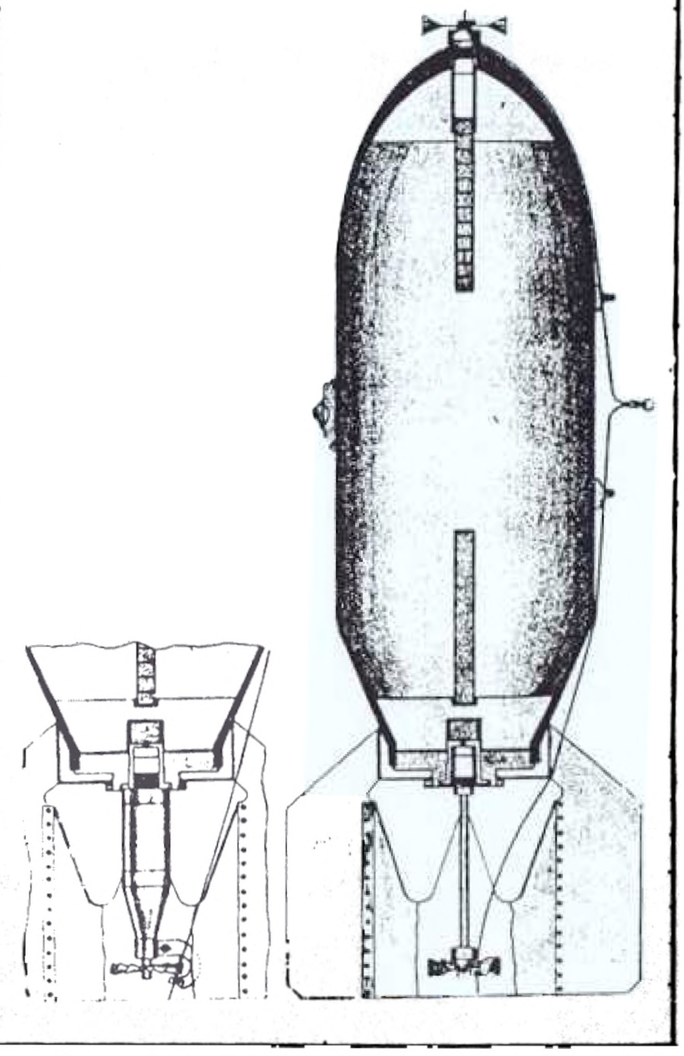

2538

[redacted]

COPY NO.

BOMB DATA — FILE NO.

NATIONALITY: U.S. Army-Navy	INFORMATION DATE Sept. 1943
SIZE: 500 lb. AN-M-43 AN-M-64 (G.P.)	TYPE: Demolition - H.E. bombs. AN-M-43 (AN-M Series) AN-M-64 (AN-M G.P. Series)

TARGET: Ammunition dumps, airplanes, railroad tracks, engines and cars, all types of construction except skyscrapers, modern seacraft except battleships.

FUZES

REGULAR MISSIONS

- Nose: AN-M-103, M-103
- Tail: AN-M-101A2, AN-M-101A1, M-101

SPECIAL MISSIONS.

(1) Masthead bombing

- Nose: Shipping plug until provided with nose fuze specifically for masthead bombing.
  M-113 (Land based planes only) AN-M-116 (carrier and land based planes.

(2) Long time delay.

- Nose
- Tail

(3) Coastal patrol missions (only in AN-M-64)

- Nose: AN-M-103 (Selective arming) M-103
- Tail: AN-M-230 Hydrostatic tail fuze. Remove sleeve in M-115 adapter booster in tail of AN-M-64. So AN-Mk-230 will fit into the tail fuze pocket. The AN-M-43 does not contain this removable sleeve and will not take the AN-Mk-230 tail fuze.

	DATA	500 lb. AN-M-43	500# AN-M-64
1.	OVERALL LENGTH	56.8 inches	56.76 inches.
2.	LENGTH OF BODY	44.9 "	42.86 "
3.	DIAMETER OF BODY	14.0 "	14.0 "
4.	THICKNESS OF WALL	0.30 "	
5.	MATERIAL OF WALL	Steel	Steel.

[redacted]

COPY NO.

BOMB DATA — FILE NO.

NATIONALITY: U.S. Army-Navy	INFORMATION DATE: Sept. 1943
SIZE: 500 lb. AN-M-43 AN-M-64(G.P.)	TYPE: Demolition H.E. bombs. AN-M-43 (AN-M-series). AN-M-64 (AN-M-G.P. series)

6.	CONSTRUCTION OF BODY	These bombs may be made by any one of the following methods: 1) From seamless steel tubing in which the nose of the bomb is formed by swaging and the tail by drawing to the necessary diameter; 2) or the case may be forged in one piece; 3) or the bomb may be formed from cast sections welded together. These bombs have male filling plugs.	
7.	TYPE OF SUSPENSION	These bombs are always held horizontally.	
8.	CONSTRUCTION OF SUSPENSION LUG.	The AN series bombs have two eyebolts welded along longitudinal axis of the bomb. They also have a third eyebolt welded to body at center of gravity and 180 degrees removed from other eyebolts. The eyebolts are formed from bar steel, shaped in the form of a U and then welded to the bomb body. The 500 AN bombs may also have trunnions on a band.	
9.	COLOR AND MARKINGS ON BOMB & TAIL.	Prior to March 11, 1942 these bombs would have been painted yellow all over with black manufacturer's markings but since that date they will be painted olive-drab, with a 1 inch yellow band around the nose and extreme rear of the bomb and 1/4 inch band, around the center of the bomb.	
		500 lb AN-M-43	500 lb AN-M-64
10.	LENGTH OF TAIL	13.9 inches	13.9 inches
11.	WIDTH OF TAIL	18.9 "	18.94 "
12.	MATERIAL OF TAIL	Sheet steel	Sheet steel
13.	CONSTRUCTION OF TAIL	This type of tail consists of the following parts; 1) a cast steel sleeve secured to the body of the bomb by a fin locking nut; 2) four fins or vanes; 3) internal box-type struts.	
14.	WEIGHT OF TAIL.	AN-M-43 12.3 lbs.	AN-M-64 12.3 lbs.
15.	TYPE OF FILLING	500 lb. AN-M-43 & AN-M-64 (G.P.) A 50-50 Amatol filling with T.N.T. surrounds around the nose and tail booster sleeve to prevent exudation from Amatol during storage. Or 100% T.N.T. filling. These bombs contain two built-in M-104 auxiliary boosters (one in nose, one in tail) which contain tetryl.	

[redacted]

COPY NO.

BOMB DATA — FILE NO.

NATIONALITY: U.S. Army-Navy	INFORMATION DATE: Sept. 1943
SIZE: 500 lb. AN-M-43 AN-M-64(G.P.	TYPE: Demolition H.E. Bombs.

15. TYPE OF FILLING (cont'd)

		AN-M-43 Amatol	AN-M-43 T.N.T.
16.	WEIGHT OF FILLING.	264.5 #	
17.	TOTAL WT. OF BOMB.		
18.	CHARGE/WT. RATIO.		

19. REMARKS: The AN-M-43 will not take the AN-Mk-230 tail fuze. The AN-M-64 bomb will take the AN-Mk-230 fuze only if the removable sleeve is unscrewed and removed from the adapter booster with the removable sleeve screwed in the adapter booster. The M-115 adapter booster will take any Army tail fuze.

[redacted]

COPY NO.

BOMB DATA FILE NO.

NATIONALITY: U.S. Army-Navy	INFORMATION DATE: Sept. 1943
SIZE: 1000# AN-M-44 AN-M-65	TYPE: Demolition H.E. Bombs. AN-M-44 (AN-M Series) AN-M-65 (AN-M-G.P.-Series)
TARGETS: Ammunition dumps, airplanes, railway tracks, engines and cars, all types of construction except skyscrapers, modern seacraft except battleships.	

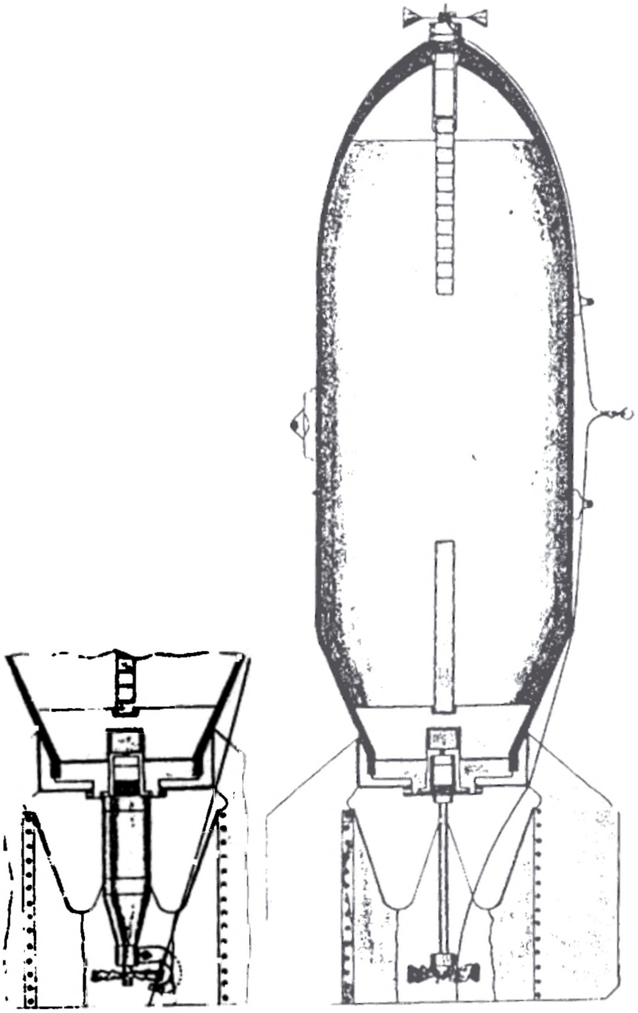

[redacted]

BOMB DATA — COPY NO. — FILE NO.

NATIONALITY: U.S. Army-Navy	INFORMATION DATE: Sept. 1943
SIZE: 1000# AN-M-44 AN-M-65	TYPE: Demolition H.E. Bombs. AN-M-44 (AN-M Series) AN-M-65 (AN-M-G.P.-Series)

TARGETS: Ammunition dumps, airplanes, railway tracks, engines and cars, all types of construction except skyscrapers, modern seacraft except battleships.

FUZES

REGULAR MISSIONS

Nose.	AN-M-103, M-103.
Tail.	AN-M-102A2, AN-M-102A1, M-102

SPECIAL MISSIONS

(1) Masthead bombing.

Nose.	Shipping plug until provided with nose fuze specifically for masthead bombing.
Tail.	M-114 (Land based planes only. AN-M-117 (Carrier and land based planes)

(2) Long time delay

Nose.	Shipping plug until provided with nose fuze specifically for this purpose.
Tail.	M-125.

(3) Coastal Patrol Missions. Only with the AN-M-65.

Nose.	AN-M-103, M-103 (Selective arming)
Tail.	AN-Mk-230 hydrostatic tail fuse (remove sleeve in M-115 adapter booster in tail so AN-Mk-230 will fit into the tail fuse pocket. The AN-M-44 does not contain this removable sleeve and will not take the AN-Mk-230 hydrostatic tail fuse.

DATA	1000# AN-M-44	1000# AN-M-65
1. OVERALL LENGTH	67.1 inches	67.1 inches
2. LENGTH OF BODY	53.1 inches	53.1 inches
3. DIAMETER OF BODY	18.7 inches	17.7 inches
4. THICKNESS OF WALL	0.5 inches	0.5 inches
5. MATERIAL OF WALL	Steel.	Steel
6. CONSTRUCTION OF BODY.	These bombs may be made by any one of the following methods: 1) From seamless steel tubing in which the nose of the bomb is formed by swaging and tail by drawing to the	

[redacted]

BOMB DATA — COPY NO. — FILE NO.

NATIONALITY: U.S. Army-Navy	INFORMATION DATE: Sept. 1943
SIZE: 1000# AN-M-44 AN-M-65	TYPE: Demolition H.E. bombs. AN-M-44 (AN-M Series) AN-M-65 (AN-M-G.P. Series)

6. CONSTRUCTION OF BODY (cont'd)	necessary diameter; 2) or the case may be forged in one piece; 3) or the bomb may be formed from cast sections welded together. These bombs have male base filling plugs.
7. TYPE OF SUSPENSION	These bombs are always held horizontally.
8. CONSTRUCTION OF SUSPENSION LUG.	The An Series bombs have two eyebolts welded to body along longitudinal axis of the bomb. They also have a third eyebolt welded to body at center of gravity and 180 degrees removed from other eyebolts. The eyebolts are formed from bar steel, shaped in the form of a U and then welded to the bomb body. The 500 lb. AN bombs may also have trunnions on a band.
9. COLOR & MARKINGS ON BOMB & TAIL.	Prior to March 11, 1942 these bombs would have been painted yellow all over with black manufacturer's markings but since that date they will be painted olive-drab with a 1 inch yellow band around the nose and extreme rear of the bomb and a 1/4 inch band around the center of gravity

	1000# AN-M-44	1000# AN-M-65
10. LENGTH OF TAIL	18.5 inches	18.5 inches
11. WIDTH OF TAIL	25.4 inches	25.4 inches
12. MATERIAL OF TAIL	Sheet steel	Sheet steel
13. CONSTRUCTION OF TAIL.	This type of tail consists of the following parts: 1) a cast steel sleeve secured to the body of the bomb by a fin locking nut; 2) four fins or vanes; 3) internal box-type struts.	
14. WEIGHT OF TAIL	21.5 lbs.	21.5 lbs.

15. TYPE OF FILLING

1000# AN-M-44
A 50-50 Amatol filling with T.N.T surrounds around the nose and tail booster sleeve to prevent exudation from Amatol during storage. 100% T.N.T fillings. This bomb contains two built-in M-104 auxiliary boosters (one in nose, one in tail) which contain tetryl. The M-102 adapter booster (tetryl) is built in the base plug and receives the tail fuse.

1000# AN-M-65
A 50-50 Amatol filling with T.N.T

[redacted]

BOMB DATA — COPY NO. — FILE NO.

NATIONALITY: U.S. Army-Navy	INFORMATION DATE: Sept. 1943
SIZE: 1000# AN-M-44 AN-M-65	TYPE: Demolition H.E. bomb. AN-M-44 (AN-M series) AN-M-65 (AN-M-G.P. series)

15. TYPE OF FILLING (cont'd)	surrounds around the nose and tail booster sleeve to prevent exudation from Amatol during storage. 100% T.N.T. filling. This bomb contains two built-in M-104 auxiliary boosters (one in nose, one in tail) which contain tetryl. The M-115 adapter booster (tetryl) is built in the base plug. This adapter booster contains a removable sleeve and comes with this sleeve screwed in the booster. With this sleeve in the adapter booster, it will receive only army tail fuzes. If this removable sleeve is removed by unscrewing it, it will take the AN-Mk-230 hydrostatic tail fuze. With selective arming and the AN-Mk-230 tail fuze, the bomb can be used against undersea craft on Coastal Patrol Missions.

	AN-M-44		AN-M-65	
	Amatol	T.N.T.	Amatol	T.N.T.
16. WEIGHT OF FILLING	536.6#	566.0#	530.0#	530.0#
17. TOTAL WT OF BOMB	939.0#	967.0#	977.0#	1008.0#
18. CHARGE/WT RATIO	57.2%	58.5%	53.0%	53.0%

19. REMARKS.	The An-M-44 will not take the AN-Mk-230 tail fuze. The AN-M-65 bomb will take the AN-Mk-230 fuze if the removable sleeve is unscrewed and removed from the adapter booster. With the removable sleeve screwed in the adapter booster, the M-115 adapter booster will take any Army tail fuze.

BOMB DATA [redacted] FILE NO. COPY NO

NATIONALITY: U.S. Army-Navy	INFORMATION DATE: Sept. 1943
SIZE: 2000 lb. AN-M 66 2000 lb. AN-M34	TYPE: Demolition H.E. Bombs (AN-M (G.P.) Series)
TARGETS: Masonry, dams, battleships, cruisers, heavily reinforced bridges, and large skyscrapers.	

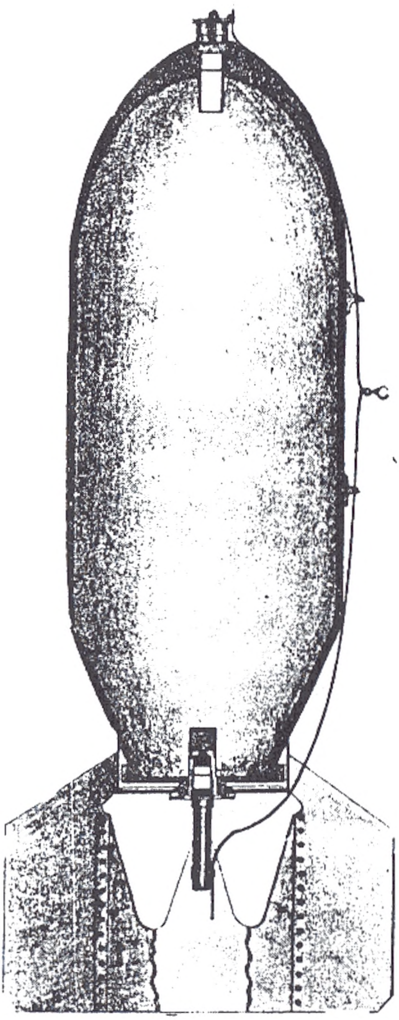

BOMB DATA [redacted] FILE NO. COPY NO

NATIONALITY: U.S. Army-Navy	INFORMATION DATE: Sept. 1943
SIZE: 2000 lb. AN-M 66 2000 lb. AN-M34	TYPE: Demolition H.E. Bombs (AN-M (G.P.) Series)

TARGETS: Masonry, dams, battleships, cruisers, heavily reinforced bridges, and large skyscrapers.

FUZES

REGULAR MISSIONS

Nose:	AN-M 103, M 103
Tail:	AN-M 102A2, AN-M 102A1, M 102

SPECIAL MISSIONS

(1) Masthead Bombing.

Nose:	Shipping plug until provided with nose fuze specifically for mast-head bombing.
Tail:	M-114 (Land based planes only) AN-M 117 (Carrier and land based planes)

(2) Long time delay

Nose:	Shipping plug until provided with nose fuze specifically for this purpose.
Tail:	M - 125

(3) Coastal Patrol Missions. Only with AN-M 65

Nose:	AN-M 103, M-103 (Selective arming)
Tail:	AN-MK 230 Hydrostatic tail fuze. (Remove sleeve in M-115 adapter booster in tail so AN-MK 230 will fit into the tail fuze pocket. The AN-M 34 does not contain this removeable sleeve and will not take the AN-MK 230 Hydrostatic tail fuze.

DATA	2000 lb. AN-M 66
1. OVERALL LENGTH	92.9 inches
2. LENGTH OF BODY	70.0 inches
3. DIAMETER OF BODY	23.3 inches
4. THICKNESS OF WALL	0.5 inches
5. MATERIAL OF WALL	Steel

6. CONSTRUCTION OF BODY These bombs may be made by any one of the following methods: 1) From seamless steel tubing in which the nose of the bomb is formed by swaging and the tail by drawing to the necessary diameter; 2) or the case may be forged in one piece; 3) or the bomb may be formed from cast sections welded together. These bombs have male base filling plugs.

7. TYPE OF SUSPENSION	These bombs are always suspended horizontally.

BOMB DATA [redacted] FILE NO. COPY NO.

NATIONALITY: U.S. Army-Navy	INFORMATION DATE: Sept. 1943
SIZE: 2000 lb. AN M 66	Type: Demolition H.E. Bombs (AN-M (G.P.) Series)

8. CONSTRUCTION OF SUSPENSION LUG	The AN Series Bombs have two eyebolts welded to body along longitudinal axis of the bomb. They also have a third eyebolt welded to body at center of gravity and 180 degrees removed from other eyebolts. The eyebolts are formed from bar steel, shaped in the form of a U and then welded to the bomb body. The 500 lb. AN bombs may also have trunnions on a band.
9. COLOR & MARKINGS ON BOMB AND TAIL	Prior to March 11, 1942 these bombs would have been painted yellow all over with black manufacturer's markings but since that date they will be painted olive-drab with a 1 inch yellow band around the nose and extreme rear of the bomb and a 1/4 inch band around the center of gravity.
10. LENGTH OF TAIL	25.7 inches
11. WIDTH OF TAIL	31.6 inches
12. MATERIAL OF TAIL	Sheet Steel
13. CONSTRUCTION OF TAIL	This type of tail consists of the following parts; 1) a cast steel sleeve secured to the body of the bomb by a fin locking nut; 2) Four fins or vanes; 3) Internal box-type struts.
14. WEIGHT OF TAIL	38.6 lbs.
15. TYPE OF FILLING	Two types of filling are used in the demolition bombs; 1) A 50/50 Amatol filling with T.N.T. surrounds around the nose and tail booster sleeve to prevent exudation from Amatol during storage; 2) A T.N.T. filling. Figures given for 1000 lb. bomb are for Amatol filling only.

	50/50 Amatol	T.N.T.
16. WEIGHT OF FILLING	1014 lbs.	1117 lbs.
17. TOTAL WEIGHT OF BOMB	2045 lbs.	2101 lbs.
18. CHARGE/WEIGHT RATIO	54%	

[redacted]

COPY NO.

BOMB DATA FILE NO.

NATIONALITY: U.S. Army -Navy	INFORMATION DATE: Sept. 1943
SIZE: 4000 lb. AN-M-56	TYPE: G.P.-H.E. (AN-M-Series)
TARGETS: Residential areas and light constructed buildings in rather heavily populated areas.	

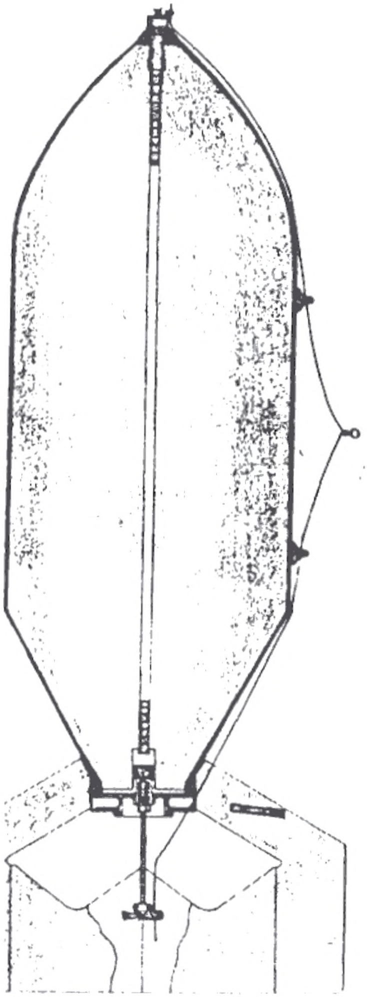

[redacted]

COPY NO.

BOMB DATA FILE NO.

NATIONALITY: U.S. Army-Navy	INFORMATION DATE: Sept. 1943
SIZE: 4000 lb. AN-M-56	TYPE: G.P.-H.E. (AN-M-Series)

TARGETS: Residential areas and light constructed buildings in rather heavily populated areas.

FUZES

Nose. AN-M-103, M-103, instantaneous always.

Tail. AN-M-102A2, 102A1, M-102 (Non-delay action)

DATA	4000 lb. AN-M-56
1. OVERALL LENGTH	117.25 "
2. LENGTH OF BODY	94.9 "
3. DIAMETER OF BODY	34.0 "
4. THICKNESS OF WALL	0.37 "
5. MATERIAL OF WALL	Steel.
6. CONSTRUCTION OF BODY.	AN bombs are constructed the same as the M series, i.e. by 1) use of seamless steel tubing, 2) by forging, or 3) by casting. The AN series use a male-type filling base plug whereas the M series use a female-type cap.
7. TYPE OF SUSPENSION.	These bombs are always held horizontally.
8. CONSTRUCTION OF SUSPENSION LUG.	The AN bombs have two eyebolts welded to body along longitudinal axis of the bomb. They also have a third eyebolt welded to body at center of gravity and 180 degrees removed from other eyebolts. The eyebolts are formed from bar steel shaped in the form of a U and then welded to the bomb body. The 1000 lb. AN bombs may also have trunnions on a band.
9. COLOR AND MARKINGS ON BOMB & TAIL.	Prior to March 11, 1942 these bombs would have been painted yellow all over with black manufacturer's markings but since that date they will be painted olive-drab with a 1 inch yellow band around the nose and extreme rear of bomb and a 1/4 inch band around the center of gravity.
10. LENGTH OF TAIL	28.0 "
11. WIDTH OF TAIL	47.6 "
12. MATERIAL OF TAIL	Sheet steel.
13. CONSTRUCTION OF TAIL.	This type of tail consists of the following parts: 1) A cast steel sleeve secured to the body by a fin locking nut; 2) four fins or vanes; 3) internal box-like struts; One vane and one strut are pressed from one piece of metal and the

[redacted]

COPY NO.

BOMB DATA FILE NO.

NATIONALITY: U.S. Army-Navy	INFORMATION DATE: Sept. 1943
SIZE: 4000 lb. AN-M-56	TYPE: G.P. H.E. (AN-M Series)

13. CONSTRUCTION OF TAIL (cont'd)	four pieces are welded together and to the sleeve.
14. WEIGHT OF TAIL	95.0 lbs.
15. TYPE OF FILLING	1) A 50-50 Amatol filling with T.N.T. surrounds around the nose and tail booster sleeve to prevent exudation from the Amatol during storage. 2) Recently 100% T.N.T. is being used. The M-111 auxiliary booster (tetryl) is built in the bomb and extends from the fuse pocket in the nose to the tail fuse pocket. The M-102 adapter booster (tetryl) is built in the tail fuse pocket.

	50-50 Amatol	T.N.T.
16. WEIGHT OF FILLING	3240.6 lbs.	3362.0 lbs.
17. TOTAL WEIGHT OF BOMB.	4087.0 lbs.	4204.0 lbs.
18. CHARGE/WEIGHT RATIO	79.3%	79.9%

[redacted] COPY NO.

BOMB DATA FILE NO.: 1165.01

NATIONALITY: U.S. ARMY-NAVY	INFORMATION DATE: Sept. 1943
SIZE: 500 lb. AN-M 58 1000 lb. AN-M 59	TYPE: S.A.P. - H.E.
TARGET: Naval seacraft, reinforced concrete or steel construction:	FUZES (Tail): 500 lb. - AN-M 101A1 1000 lb. - AN-M 102A1

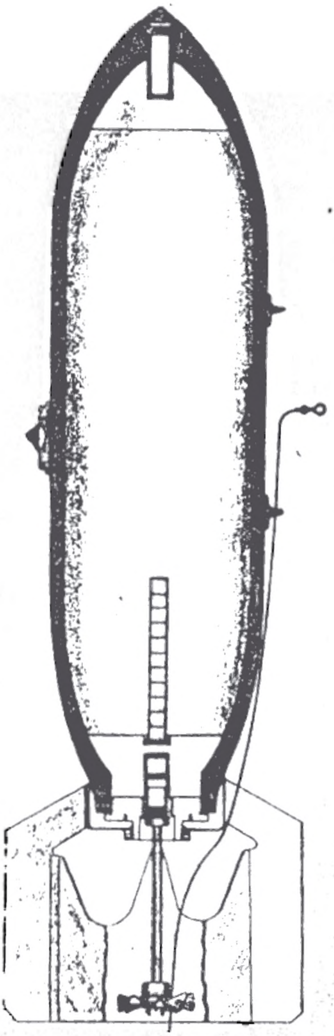

[redacted]

BOMB DATA | FILE NO. | COPY NO.

NATIONALITY: U.S. Army-Navy	INFORMATION DATE: Sept. 1943
SIZE: 500 lb. AN-M-58 1000 lb. AN-M-59	TYPE: S.A.P. - H.E.
TARGET: Naval aircraft, reinforced concrete, or steel construction.	

FUZES

TAIL:	500 lb. AN-M-101A1 AN-M-101A2 1000 lb. AN-M-102A1 AN-M-102A2

DATA	500 lb. AN-M-58	1000 lb. AN-M-59
1. OVERALL LENGTH	57.8 "	69.3 "
2. LENGTH OF BODY	46.8 "	57.3 "
3. DIAMETER OF BODY	11.8 "	15.1 "
4. THICKNESS OF WALL	0.75"	1.0 "
5. MATERIAL OF WALL	Steel	Steel.
6. CONSTRUCTION OF BODY	AN bombs are constructed the same as the M series, i.e. by 1) use of seamless steel tubing, 2) by forging, or 3) by casting. The AN series use a male-type filling base plug, whereas the M series use a female-type cap.	
7. TYPE OF SUSPENSION	These bombs are always held horizontal.	
8. CONSTRUCTION OF SUSPENSION LUG.	The AN series bombs have two eyebolts welded to body along longitudinal axis of the bomb. They also have a third eyebolt welded to the body at center of gravity and 180 degrees removed from other eyebolts. The eyebolts are formed from bar steel shaped in the form of a U and then welded to the bomb body. The 500 lb. AN bombs may also have trunnions on a band.	
9. COLOR & MARKINGS ON BOMB & TAIL.	Prior to March 11, 1942 these bombs would have been painted yellow overall with black manufacturer's markings but since that date they will be painted olive-drab with a 1 inch yellow band around the nose and extreme rear of the bomb and a 1/4 inch band around the center of the bomb.	

	500 lb. AN-M-58	1000 lb. AN-M-59
10. LENGTH OF TAIL	15.05 inches.	16.8 inches.
11. WIDTH OF TAIL	16.16 "	20.7 "
12. MATERIAL OF TAIL	Sheet steel	Sheet steel.

[redacted]

BOMB DATA | FILE NO. | COPY NO.

NATIONALITY: U.S. Army-Navy	INFORMATION DATE: Sept. 1943
SIZE: 500 lb. AN-M-58 1000 lb. AN-M-59	TYPE: S.A.P. - H.E.
13. CONSTRUCTION OF TAIL	This type of tail consists of the following parts: 1) a cast steel sleeve secured to the body of the bomb by a fin locking nut; 2) four fins or vanes; 3) internal box-type struts. One vane and one strut are pressed from one piece of metal and the four pieces are welded together and to the sleeve.

	500 lb. AN-M-58	1000 lb. AN-M-59
14. WEIGHT OF TAIL	11.4 lbs.	17.0 lbs.
15. TYPE OF FILLING	Two types of fillings are used in the demolition bombs; 1) a 50-50 Amatol filling with T.N.T. surrounds around the nose and tail booster sleeve to prevent exudation from Amatol during storage; 2) a T.N.T. filling.	

	50-50 Amatol	T.N.T.
16. WEIGHT OF FILLING. 500 lb. AN-M-58 1000 lb. AN-M-59	 154.0 lbs. 307.5 lbs.	 160.0 lbs. 318.0 lbs.
17. TOTAL WEIGHT OF BOMB. 500 lb. AN-M-58 1000 lb. AN-M-59	 466.5 lbs. 971.0 lbs.	 471.5 lbs. 991.0 lbs.
18. CHARGE/WEIGHT RATIO 500 lb. AN-M-58 1000 lb. AN-M-59	 33.0% 31.7%	 34.0% 32.0%

19. REMARKS:	In an emergency if there are no fragmentation or G.P. bombs available, an AN-M-103 fuse (with instantaneous functioning time) can be inserted in the nose of these bombs along with an AN-M-101A2 (in 500 lb. bomb) or AN-M-102A2 (in 1000 lb. bomb) fuze in the tail with a non-delay primer detonator to give fragmentation effect.

[redacted]

COPY NO.

BOMB DATA	FILE NO.
NATIONALITY: U.S. Army-Navy	INFORMATION DATE: Sept. 1943
SIZE: AN-Mk 33, 1000 lb. A.P.	TYPE: Armor Piercing.
TARGET: Armored ships and heavy fortifications	FUZE: AN-Mk-228 Tail fuze.

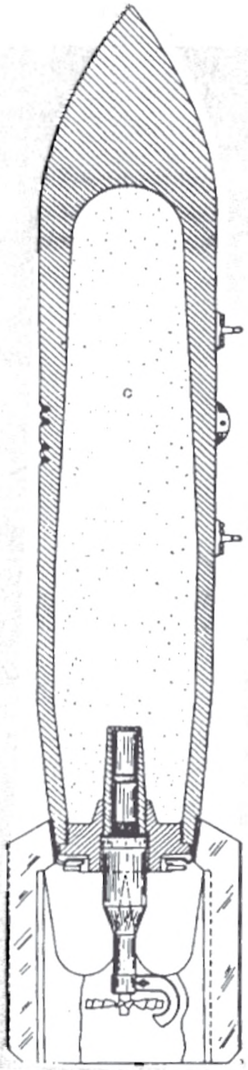

2638

COPY NO.

BOMB DATA | FILE NO.

NATIONALITY: U.S. Army-Navy	INFORMATION DATE: Sept. 1943
SIZE: AN-Mk 33, 1000 lb. A.P.	TYPE: Armor Piercing.
TARGET: Armored ships and heavy fortifications	FUZE: AN-Mk-228 Tail fuze.

DATA	
1. OVERALL LENGTH.	73 "
2. LENGTH OF BODY	58 "
3. DIAMETER OF BODY	12 "
4. THICKNESS OF WALL	
5. MATERIAL OF WALL	Steel.
6. CONSTRUCTION OF BODY	One piece forged steel.
7. TYPE OF SUSPENSION	Horizontal. Adapted for use by either U.S. Army or Navy or British planes.
8. CONSTRUCTION OF SUSPENSION LUG	Two lugs 14" apart for U.S. One lug on opposite side and removable trunnions for use by British.
9. COLOR AND MARKINGS OF BOMB AND TAIL	Olive drab overall.
10. LENGTH OF TAIL	17"
11. WIDTH OF TAIL	16"
12. MATERIAL OF TAIL	Sheet steel.
13. CONSTRUCTION OF TAIL	Four fins welded to tail cone which is held on body by lock nuts. The fins are supported by box type struts.
14. WEIGHT OF TAIL	13 lbs.
15. TYPE OF FILLING	Explosive D.
16. WEIGHT OF FILLING	140 lbs. Explosive D.
17. TOTAL WEIGHT OF CASE	868 lbs.
18. CHARGE/WEIGHT RATIO	14.1% Explosive D.

19. REMARKS: Armor piercing quality:

1. Horizontal bombing.		2. Dive Bombing (60 degree dive, 300 knots true air speed.	
Alt. of release	Armor penetration.	Alt. of release	Armor penetration.
6000 feet	3.4 inches	2000 feet	3.1 inches
8000 "	4.2 "	3000 "	3.5 "
10000 "	4.9 "	4000 "	3.8 "
12000 "	5.5 "	5000 "	4.2 "
14000 "	6.1 "	6000 "	4.5 "

BOMB DATA [redacted]

COPY NO.__________

FILE NO.: 1176.A1

NATIONALITY: U.S. Army-Navy	INFORMATION DATE: Sept. 1943
SIZE: 1600 lb. AN-Mk 1	TYPE: A.P. - H.E.
TARGET:	**FUZES: TAIL: Mk. XXVIII or AN-Mk. XXVIII**

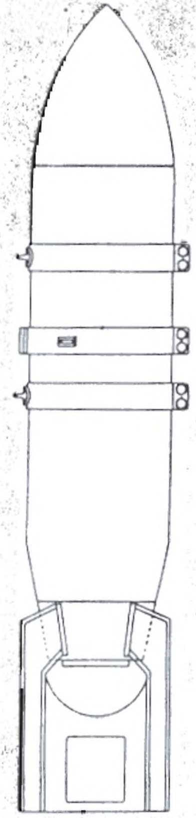

[redacted]

BOMB DATA — FILE NO. — COPY NO.

NATIONALITY: U.S. Army - Navy.	INFORMATION DATE: Sept. 1943
SIZE: 1600 lb. AN-Mk I	TYPE: Armor piercing.

TARGET: This bomb is used against heavy armor plate such as cruisers and battleships. This may also be used against heavy reinforced concrete structures.

FUZES: Mk 219 or AN-Mk 219 -- these have a short delay of .08 (plus or minus .01) seconds. The short delay is to allow the bomb to penetrate the armor before detonation.

DATA	1600 lb. AN-Mk I
1. OVERALL LENGTH	83.5 "
2. LENGTH OF BODY	69.5 "
3. DIAMETER OF BODY	14.0 "
4. THICKNESS OF WALL	1.3 "
5. MATERIAL OF WALL	Steel.
6. CONSTRUCTION OF BODY	Machined A.P. projectile forging.
7. SUSPENSION	There are two bands around the bomb with suspension lugs on them. These bands are properly spaced so that the lugs may be used for suspension in ordinary bomb racks. If used on the dive bomber, then the trunnion band may be placed on bomb.
8. COLOR AND MARKINGS ON BOMB AND TAIL.	Grey with eleven inch yellow disc just aft of rear suspension lug. May be painted yellow all over.
9. LENGTH OF TAIL	20.5 " (approx)
10. WIDTH OF TAIL	20.6 "
11. MATERIAL OF TAIL	Sheet steel.
12. CONSTRUCTION OF TAIL	Four vanes welded to tail cone, interior box-type struts. Cone secured to body by tail lock nut.
13. TYPE OF FILLING	Explosive D.
14. WEIGHT OF FILLING	215 lbs.
15. TOTAL WEIGHT OF BOMB	1605 lbs.
16. CHARGE/WEIGHT RATIO	13%

17. REMARKS: The manufacture of this bomb is continued.

ARMOR PENETRATION AS FOLLOWS

1. Horizontal bombing.

Altitude of release	Armor penetration.
6000 feet.	4.0 inches.
8000 "	5.0 "
10000 "	5.8 "
12000 "	6.5 "

[redacted]

BOMB DATA — FILE NO. — COPY NO.

NATIONALITY: U.S. Army-Navy	INFORMATION DATE: Sept. 194 3
SIZE: 1600 lb. AN-Mk I	TYPE: Armor piercing.

ARMOR PENETRATION AS FOLLOWS

1. Horizontal bombing (cont'd).

Altitude of release	Armor penetration.
14000 feet	7.2 inches.

2. Dive bombing (60 degree dive 300 knots true air speed.)

Altitude of release	Armor penetration
2000 Feet.	3.7 inches.
3000 "	4.1 "
4000 "	4.5 "
5000 "	4.8 "
6000 "	5.0 "

[redacted]

DEPTH BOMBS

INTRODUCTION

The depth bomb was originally designed with the round nose. In actual usage, it was found that the underwater trajectory of this bomb was not satisfactory, consequently the flat nose attachment was developed. The flat nose attachment is in the shape of a bucket and fits down under the nose of the bomb. The vacant spaces are then filled with plaster of paris. When this attachment is filled, the weights of the bombs increase from the 325 lb. bombs by 44 lbs. and the 650 lb. bombs by 72 lbs.

At the outset the flat nose attachments were manufactured separately and sent out to be placed on the depth bombs already in the field. At about the same time the depth bombs were being manufactured with the attachment on them. Subsequently the depth bomb was redesigned so that the actual bomb case was flat thereby eliminating the necessity of the attachment.

The new design with the flat nose is designated as the AN Mark 41, AN Mark 47, Mark 38, and Mark 49.

Some of the round nose depth bombs are still being manufactured and a small supply kept on hand at the Navy ammunition depots. However, the large majority of depth bombs will either have flat nose attachments or will be built with the flat nose.

Due to the air currents around the flat nose of the bomb, the nose fuzes have difficulty in arming. The AN M 103 will not arm on the flat nose. The AN Mark 219 will arm with difficulty at 2500 feet. The AN-M 103 is now being designed with wider arming vanes and a pitch of 30 degrees. This new design of the fuze will permit it to arm on the flat nose.

The depth bombs are primarily filled with T.N.T., however, the 350 lb. AN-Mark 47 and 700 lb. Mark 49 are filled with Torpex. It is believed that Torpex gives greater force of blast in detonation.

DEPTH BOMB DATA [redacted] **COPY NO.**
FILE NO.

NATIONALITY: U.S. Navy	INFORMATION DATE Sept. 1945
SIZE: 325 lb. AN-MK 17-2 350 lb. AN-MK 44	TYPE: Depth Bomb
TARGET: Submarine or light surface vessels	

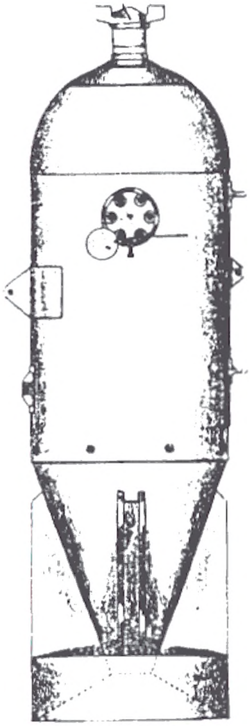

DEPTH BOMB DATA [redacted] COPY NO.
FILE NO.

NATIONALITY: U.S. Navy	INFORMATION DATE Sept. 1943
SIZE: 325 lb. AN-MK 17-2 350 lb. AN-MK 44	TYPE: Depth Bomb
TARGET: Submarine or light surface vessels	

FUZES: AN-Mark 219 - When used an auxiliary booster must be inserted first and the MK-19 Adapter ring used to fit fuse in bomb.
Note: This fuze will not arm under 2500 ft. if flat nose attachment is on bomb. Instantaneous action.
MK-21 Auxiliary booster not necessary - fuse will not arm on flat nose under 2500 ft.
AN-M 103 Will not arm at all on flat nose due to air current. Arming vanes on fuse being modified so it will arm.
MK-221 Short delay.

ATHWARTSHIP: AN-MK 224 (Hydrostatic fuse)

DATA	AN-MK 17-2 & AN-MK 44
1. OVERALL LENGTH	52.5 inches
2. LENGTH OF BODY	31.1 "
3. DIAMETER OF BODY	15.0 "
4. THICKNESS OF WALL	.06 "
5. MATERIAL OF WALL	Sheet Steel

6. CONSTRUCTION OF BODY These depth bombs are made with the round nose which is welded to a cylindrical steel tube. There is a strengthening disc around the nose and a steel strip along the suspension lugs to reinforce the body. The transverse fuse pocket is 11.9 inches aft of nose.

In order to prevent ricochet and improve underwater trajectory a flat nose attachment is made for these depth bombs. These attachments are in the shape of a bucket which fits down over the nose and is filled with plaster of paris. See fuses above for difficulty of arming with attachment.

7. SUSPENSION Two lugs on one side and a suspension bracket on the opposite side 180 degrees removed. Trunion bands are used when suspended from dive bombers.

8. COLOR AND MARKINGS ON BOMB AND TAIL Grey with eleven inch yellow disc just aft of rear suspension lug. May be painted yellow all over.

9. LENGTH OF TAIL	20.2 inches
10. WIDTH OF TAIL	20.6 "
11. MATERIAL OF TAIL	Sheet Steel

12. CONSTRUCTION OF TAIL Four vanes welded to tail cone, interior box-type struts. Cone secured to body by tail lock nut.

	AN-MK 17-2	AN-MK 44
13. TYPE OF FILLING	T.N.T.	TORPEX .

DEPTH BOMB DATA [redacted] COPY NO.
FILE NO.

NATIONALITY: U.S. Navy	INFORMATION DATE: Sept. 1943
SIZE: 325 lb. AN-MK 17-2 350 lb. AN-MK 44	TYPE: Depth Bomb
TARGET: Submarine or light surface vessels.	

14. WEIGHT OF FILLING	243 lbs.	270 lbs.
15. TOTAL WEIGHT OF BOMB	345 lbs.	349 lbs.
16. CHARGE/WEIGHT RATIO	70%	77%

17. REMARKS

CONVERTING DEPTH CHARGES
300 lb.--- Mark III
300 lb.--- Mark VI
600 lb.--- Mark VII
300 lb.--- Mk II, Mod 2

The above depth charges can be converted for aircraft carrying and releasing by the use of the so-called "Flight Adapter". The Flight Adapter (made of steel and weighing about 33 lbs) has a box-tail structure which acts as a stabelizer during the fall of the depth charge, preventing end-over-end pitching. The Flight Adapter also allows the depth charge to be suspended from either a single bomb or a multiple-unit bomb rack.

NOTE: The AN MK 44 is no longer in production.

[redacted]

COPY NO.

BOMB DATA FILE NO.

NATIONALITY: U.S. Army-Navy	INFORMATION DATE: Sept. 1943
SIZE: 325 lb. AN-Mk- 41 350 lb. AN-Mk- 47	TYPE: Aircraft Depth Bomb.
TARGET: Submarines and other ships.	

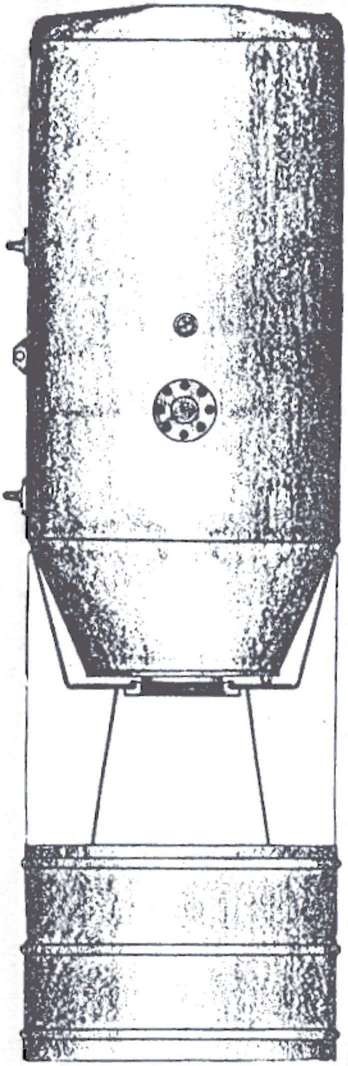

[redacted]

BOMB DATA — FILE NO. — COPY NO.

NATIONALITY: U.S. Army-Navy	INFORMATION DATE: Sept. 1943
SIZE: 325 lb. AN-Mk- 41 350 lb. AN-Mk- 47	TYPE: Aircraft Depth Bomb.
TARGET: Submarines and other ships.	
	FUZES
NOSE:	AN-Mk 219 instantaneous - Insert one Navy auxiliary booster and use Mk 19 adapter ring. This fuse will not arm on flat nose under 2500 feet. AN-M-103 - Selective delay or instantaneous. Fuse will not arm - do not use until modified AN-M-103 is supplied with the wider arming vanes. Mk-221 Delay - arms with difficulty as does the AN-Mk-219.
ATHWARTSHIP:	AN-Mk-224 or AN-Mk-234 (Hydrostatic fuzes.)
DATA	
1. OVERALL LENGTH (without fuze)	49.87 "
2. LENGTH OF BODY	27.775 "
3. DIAMETER OF BODY	14.875 "
4. THICKNESS OF WALL	0.06 "
5. MATERIAL OF WALL	Sheet steel.
6. CONSTRUCTION OF BODY.	The nose is flat with a slight taper from the walls to the nose. A transverse fuze pocket tube is welded into place 15" aft of the nose. A stiffener strip is welded to the body under all suspension lugs. The bomb body is in three pieces, the sides being tubular, with nose and tail covers attached. The flat nose is built in this depth bomb and is not an attachment as in the case of the AN-Mk-17-2 and AN-Mk-44.
7. TYPE OF SUSPENSION	Horizontal.
8. CONSTRUCTION OF SUSPENSION LUG.	Two lugs 14" apart, hoisting lug between them. One other lug 180 degrees removed from above lugs, located at the center of gravity. Trunnion bands may be used for dive bombers.
9. COLOR & MARKINGS ON BOMB AND TAIL	Olive drab overall.
10. LENGTH OF TAIL	24.60 "
11. WIDTH OF TAIL	15.375"

[redacted]

BOMB DATA — FILE NO. — COPY NO.

NATIONALITY: U.S. Army-Navy	INFORMATION DATE: Sept. 1943	
SIZE: 325 lb. AN- Mk-41 350 lb. AN-Mk-47	TYPE: Aircraft depth bomb.	
12. MATERIAL OF TAIL	Sheet steel.	
13. CONSTRUCTION OF TAIL	Conical tail assembly held to body by rivets or screws. Four tail fins spot welded to cone supported by a drum type strut.	
	AN-Mk-41	AN-Mk-47
14. TYPE OF FILLING	T.N.T.	Torpex.
15. WEIGHT OF FILLING	227 lbs.	252 lbs.
16. TOTAL WEIGHT OF BOMB.	325# (approx)	350# (approx.)
17. CHARGE/WEIGHTRATIO.	69%	72%
18. REMARKS.	Nose piece is flat to improve under-water trajectory. Torpex is employed in order to obtain stronger mining effect.	

BOMB DATA [redacted] COPY NO. ____________

FILE NO.: 1142.02

NATIONALITY: U.S. ARMY	INFORMATION DATE: Sept. 1943
SIZE: 44.0 lb. M 24 52.5 lb. M 26	TYPE: Flare (night bombing)
TARGET: Used for flare in night bombing or may be used as a marker.	FUZES: 52.5 lb. - Nose fuze M 111

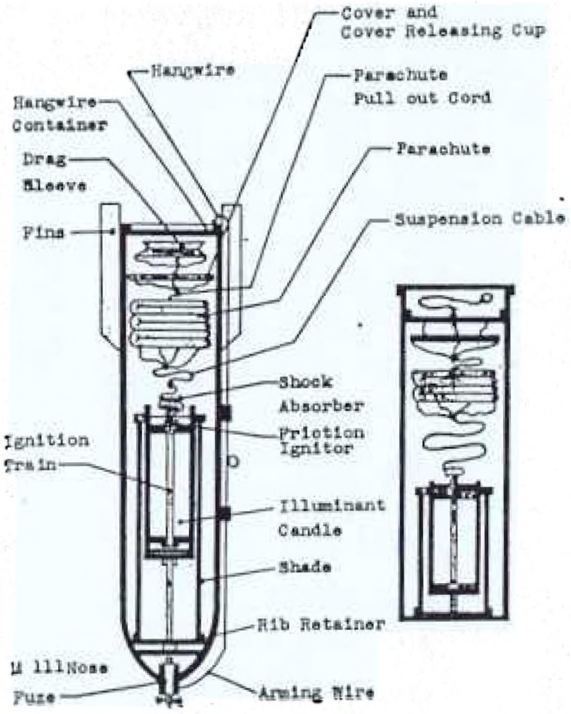

FLARE DATA [redacted] FILE NO. COPY NO.

NATIONALITY: U.S. Army-Navy	INFORMATION DATE: Sept 1943.
DESIGNATION: 53 lb. AN-M 26	
CLASSIFICATION: Aircraft parachute flare for night bombardment.	

USE: High altitude night bombardment.
The M.111 time fuze is used with this flare and can be set to function at 3,000 feet, when released from any altitude between 5,000 and 25,000 feet. A table showing the time required for a flare to fall from any altitude in the above range to an altitude of 3,000 feet and the drpping angle to be used with various plane speeds will be found in technical data appended.

DATA	
BURNING TIME	3 to 3.5 minutes
RATE OF FALL AFTER IGNITION	700 ft. min. (approx)
INTENSITY Standard illuminant Substitute illuminant	 800,000 candlepower 575,000 candlepower
COLOR	
WEIGHT AS DROPPED	53 lbs
LENGTH OVERALL	50 inches
DIAMETER OF FLARE CASE	8 inches

MOUNTING ON AIRCRAFT:

This flare is dropped only from bomb racks and bomb shackles. If the rack or shackle to be used has only one hook, the flare should be suspended by the after lug which is above the center of gravity of the flare. Any bomb rack or shackle in general service except the Mark 35 bomb rack, will give satisfactory results. It would be advisable to test the release hooks for release with such light weight objects.

FUNCTIONING:

The flare may be released safe or armed. If released safe it may function on impact. If released armed, it functions in the following manner:

1. The movement of the flare downward withdraws the arming wire from the fuze, allowing the vane to rotate and arm the fuze. Withdrawing the arming wire also allows the arming pin to be ejected. This starts the time mechanism.

2. When the flare has dropped the length of the hangwire, the latter breaks the seal wire and pulls out the hangwire container which drops free. Meanwhile, the tear wire, which is attached to the hangwire near its end, pulls out the tear wire cord which, in turn pulls out the drag sleeve and its shroud. A short length of cord attached to the shroud removes the detachable cover lock of the cover releasing cup.

3. When the flare has dropped the combined length of the hangwire, tear wire, tear wire cord, sleeve and shrouds, the tear wire breaks allowing the flare to drop. It is stabelized in flight by its fins and the sleeve. The arming vane arms the fuze in about 6 seconds from the time of release.

FLARE DATA [redacted] FILE NO. COPY NO.

NATIONALITY: U.S. Army-Navy	INFORMATION DATE: Sept. 1943
DESIGNATION: 53 lb. AN-M 26	
CLASSIFICATION: Aircraft parachute flare for night bombardment.	

4. When the time set on the periphery of the fuze has elapsed, a small charge of black powder explodes and pushes out the cover releasing cup. The four retaining pins which engage the groove in the case are retracted by the retaining pin springs. This releases the detachable cover to which the sleeve shrouds are attached and allows the drag sleeve and cover assembly to separate from the flare

5. The cover assembly is fastened to the parachute by the parachute pull-out cord. The pull out cord and the expanding gases from the exploded black powder force the parachute, glass cloth shade, and illuminant from the case which falls free. As the parachute leaves the case, the parachute pull-out cord is broken by the stress applied by the drag sleeve. The sleeve falls away from the suspended flare, as does the flare case.

6. The shock caused by the opening of the parachute is taken up by the shock absorber. This is composed of two lengths of copper tubing which have been slipped over the suspension cable and then coiled around an arbor about three-quarters of an inch in diameter. The shock is absorbed by straightening the copper tubing.

7. As the suspension cable straightens, the ignition wires are pulled through the ignition mixture. This starts the ignition train composed of the igniter, the delay element, the quickmatch, which runs down through the center of the candle, the first fire composition and the illuminant candle. The delay element burns for about 6 seconds to assure the complete opening of the parachute before the candle ignites. As the candle ignites the gases generated force off the rib retainer allowing the rib springs to open the shade. Full ignition is reached in about 8 seconds.

2638

M-100 SERIES TAIL FUZES

The following four pages contain a diagram and information on the M-100 Series of Bomb Fuzes. These fuzes are the most commonly used tail fuzes. Since the operation of all of the fuzes in this series is essentially the same, they have been discussed under one heading. The following fuzes are discussed:

M-100
AN M-100A1
AN M-100A2
M-101
AN M-101A1
AN M-101A2
M-102
AN M-102A1
AN M-102A2

It will be noted that the M-100, M-101, and M-102 fuzes are the same except for the length of the impeller shafts. The length of the shaft varies to fit the different sizes of the bombs. The same holds true in the A1 and A2 series of these fuzes. The other minor differences in the A1 and A2 series are discussed in the data.

PART II

U S BOMB FUZES

SECTION A

ARMY FUZES

[redacted]

FUZE DATA

COPY NO.
FILE NO. 8111.81

NATIONALITY: U.S. Army.	INFORMATION DATE: Sept. 1943
DESIGNATION: M-100, M-101, M-102	TYPE OF MISSILE: H.E. Bombs.
CLASSIFICATION: Mech. Impact, tail fuze.	MARKINGS: M-100, M-101, M-102.

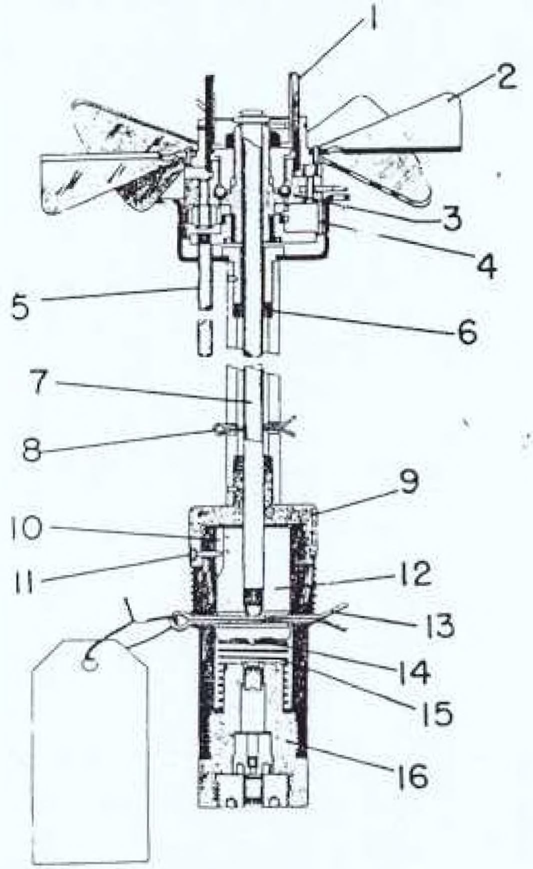

[redacted]

COPY NO.
FILE NO. 2111.21

NATIONALITY: U.S. Army.

DESIGNATION: M-100, M-101, M-102	**TYPE OF MISSILE:** H.E. Bombs.
CLASSIFICATION: Mech. Impact, tail fuze.	**MARKINGS:** M-100, M-101, M-102.

	M-100	M-101	M-102
DA'			
. C(	Unpainted		Unpainted
	10 inches.		16 inches.
	2.3 " 5.0"	2.3 " 5.0 "	2.3 " 5.0 "

4. MATERIAL OF CONSTRUCTION	The fuses are made of cadmium plated steel with brass striker block, brass primer-detonator holder and several small brass parts.
5. DIFFERENCES.	These fuses are identical except for the variations in the length of arming stem cases.

PARTS.

1. Vane Locking Nut.
2. Arming Vanes.
3. Gear Reduction system. (Idler, movable, and stationary gears)
4. Vane Cap.
5. Gear Carrier stop.
6. Bushing.
7. Arming Stem.
8. Shipping Wire.
9. Fuse body.
10. Keyway.
11. Key.
12. Striker Block.
13. Safety Pin or shipping wire.
14. Striker.
15. Creep Spring.
16. Primer Detonator. (staked in fuse.)

OPERATION. When the bomb is dropped, the arming wire is withdrawn, freeing the vanes (2) which then rotate. This caused the idler gear to walk around the moveable (top) gear and the stationary gear (bottom). Due to the fact that the moveable gear has 30 teeth and the stationary gear 29 teeth, the moveable gear must begin rotating one tooth in relation to the stationary gear per rotation of the vanes. The stationary gear is held fixed by the carrier stop (5). A collar, integral with the moveable gear, is fixed to the arming stem (7) by a cotter pin. Therefore, the arming stem will also rotate in a clockwise direction. Since the arming stem is lefthand threaded, it will unscrew from the striker block (12) and the fuse body (9). After 720 revolutions of the vanes, the arming stem will be unscrewed from the striker block (12) and after approximately 1200 revolutions, it will be unscrewed from the body. At this point, the arming stem, vanes, and

[redacted]

FUZE DATA

NATIONALITY: U.S. Army.	**INFORMATION DATE:** Sept. 1943
DESIGNATION: M-100, M-101 M-102.	**TYPE OF MISSILE:** H.E. bombs.

7. OPERATION (cont'd)	gear assembly will fly off. On impact, the striker which is held up now only by a creep spring (15), will be driven into the primer-detonator by inertia.
8. POSITION & METHOD OF FIXING IN BOMB.	Screwed into the base plate of the bomb, hand tight.
9. FUZES LIKELY TO BE FOUND WITH.	Normally used with M-103, AN-M-103.
10. COMPONENTS OF EXPLOSIVE TRAIN	Primer, delay, relay and detonator contained in brass housing in base of fuse.
11. ARMING AND FUNCTIONING TIME.	These fuses are armed after 720 revolutions of the vanes. Have .10 second delay.
12. INDICATION OF ARMING.	Fuse is armed when gear carrier stop protrudes less than one inch below the vane cup.
13. PRE-ARMING FOR DIVE BOMBING.	Either (a) rotate the vanes 350 revolutions or (b) remove arming stem after inserting safety pin through striker block, drill hole in arming stem .4 inch below present hole and insert cotter in this hole. This method safer than (a) above. State on tag on fuze indicates - Pre-armed. Some of these are pre-armed at the factory.

AN-M-100A1 AN-M-101A1 AN-M-102A1	**BOMBS USED IN:** Same as M-100 series except an M-102A1 can be used in 4000 lb. AN-M-56 bomb.

Same as M-100, M-101, M-102 except:

This series incorporates the M-14 Primer-detonator which has four functioning times (non-delay, .025 second, .01 second, .10 second) rather than a fixed delay of .10 seconds as the M-100 series. The delay is stenciled on the base of the M-14 primer-detonator. In addition the base of the non delay is painted white or unpainted, the base of the .01 second delay is painted one-eighth black, and the base of the .10 second is painted all black. The base of the .025 sec. is painted [illegible] black.

Prearming this series:

Rotate the Vanes 350 revolutions; or Remove arming stem, after inserting safety pin through the striker block. Drill hole in arming stem .4 inch below present hole and insert cotter in this hole. This method is safer than above. Some are pre-armed this way at the factory. All A1 fuzes are pre-armed at the factory. State on tag on fuze if it is pre-armed.

[redacted]

2638

FUZE DATA

COPY NO.
FILE NO. 2111.21

NATIONALITY: U.S. Army.	**INFORMATION DATE:** Sept. 1943
DESIGNATION: M-100, M-101 M-102	**TYPE OF MISSILE:** H.E. bombs.

AN-M-100A2 AN-M-101A2 AN-M-102A2	**BOMBS USED IN.** This series same as M-100 series with the following exceptions: Can be used in 4000 lb. AN-M-56 bomb.

Same as AN-M-100-A1 series except:

1. Reduced number of threads from 24 single to 16 double threads which reduce number of revolutions necessary to arm, from 720 to 150-170.
2. Reduced number of vanes from eight to four.
3. Changed shape of vanes, making them narrower and increasing their pitch.

REMARKS:

Do not try to pre-arm this fuse. This fuse, as received in the field is suitable for horizontal, glide, or dive bombing but not for skip bombing.

SAFETY PRECAUTIONS WITH THESE SERIES.

1. Do not take gear assembly down in the field.
2. Insert safety pin in striker before removing stem.
3. Remove primer detonator only when changing delay. This applies only to A1 and A2 series. The primer-detonator cannot be changed on the M-100 series.
4. Do not try to unarm fuse by rotating vanes in reverse direction.

M-14 PRIMER DETONATOR

The M-14 Primer Detonator is used in the AN-M 100A1, AN-M 101A1, AN-M 102A1, AN-M 100A2, AN-M 101A2, AN-M 102A2. It cannot be used in any other fuzes, and it is the only primer detonator that can be used in the above listed fuzes. The M-14 Primer Detonator can be distinguished from the M-16 Primer Detonator by having the last 9/16 inch of its body at the base knurled all around.

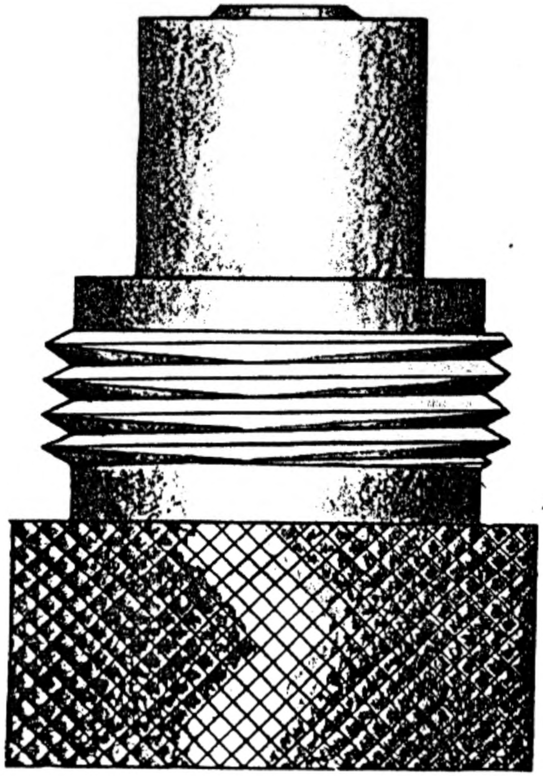

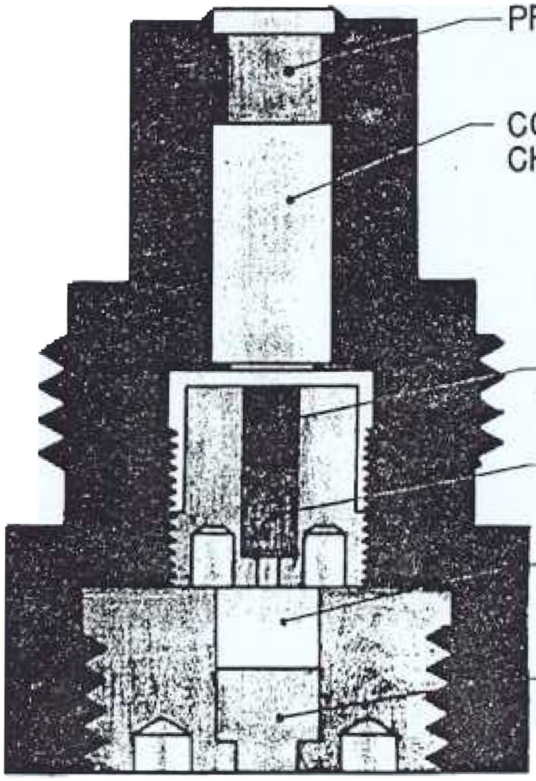

M-14 PRIMER DETONATOR

The M-14 Primer Detonator is used in the AN-M 100A1, AN-M 101A1, AN-M 102A1, AN-M 100A2, AN-M 101A2, AN-M 102A2. It cannot be used in any other fuzes, and it is the only primer detonator that can be used in the above listed fuzes. The M-14 Primer Detonator can be distinguished from the M-16 Primer Detonator by having the last 9/16 inch of its body at the base knurled all around.

COMPONENTS OF EXPLOSIVE TRAIN:

- Primer
- Compression Chamber
- Delay
- Relay
- Upper Detonator
- Lower Detonator

DELAY: The M-14 primer detonator has four optional delays as follows and each can be distinguished by the delay being stenciled on the base and by the following painting on base:

Non-delay	-	No paint or white
.01 seconds	-	1/8 of base black
.025 seconds	-	1/4 of base black
0.1 second	-	All of base black

FUZE DATA

COPY NO.
FILE NO. 2111.B2

NATIONALITY: U.S. Army-Navy	INFORMATION DATE: Sept. 1943
DESIGNATION: AN-M 103 M 103	BOMBS USED IN: All G.P. H.E. bombs of the M series.

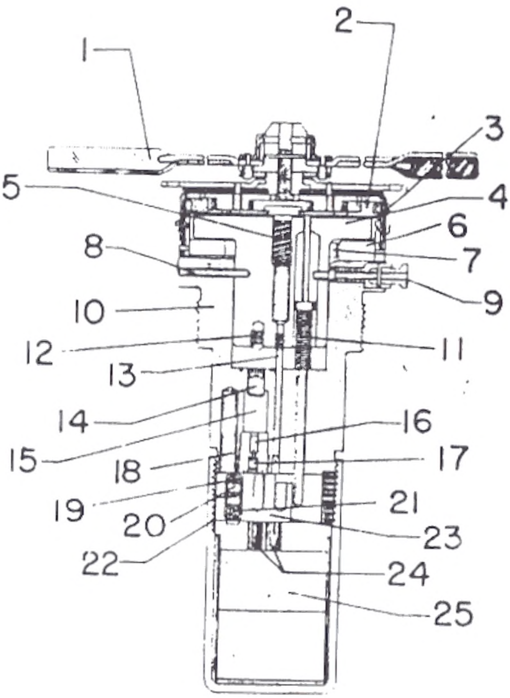

[redacted]

FUZE DATA

COPY NO.
FILE NO. 2111.B2

NATIONALITY: U.S. Army-Navy	INFORMATION DATE: Sept. 1943
DESIGNATION: AN-M 103 M 103	BOMBS USED IN: All G.P. H.E. bombs of the M series.
CLASSIFICATION: Mech. impact, nose fuze.	MARKINGS: Nose bomb fuze M-103. These markings appear on the vanes and flanges of the fuse. In addition the following typical marks will appear: P.A. 9-38, LOT 1234-5.

DATA

1. COLOR	Unpainted metal.
2. OVERALL LENGTH	7.0 inches (with booster)
3. OVERALL WIDTH	2.7 inches (body) 6.0 inches (vanes)
4. MATERIAL OF CONSTRUCTION	All parts are cadmium-plated steel or brass.

5. PARTS.

1. Arming vanes.
2. Gear reduction system
3. Vane cup screw (not on M-103 but is on AN-M-103)
4. Strikerblock assembly
5. Arming screw.
6. Safety discs.
7. Steel spring.
8. Shear wire.
9. Setting pin.
10. Fuse body.
11. Arming stem.
12. Delay striker.
13. Instantaneous striker.
14. Primer.
15. Compression chamber.
16. Delay.
17. Relay.
18. Compression cavity.
19. Primer.
20. Upper detonator.
21. Lower detonator.
22. Detonator slider springs.
23. Detonator slider.
24. Closing cup charges.
25. Booster (tetryl).

	The fuze is screwed into the nose fuse pocket, using the external threads on the fuze body.
	For instantaneous action - primer, upper detonator, lower detonator, closing cup charges and booster. For short delay - primer, compression chamber, delay, relay, primer, upper detonator, lower detonator, closing cup charges and booster.
8. FUZES LIKELY TO BE FOUND WITH.	M-100, M-101, M-102, AN-M-100A1, AN-M-101A1, AN-M-102A1, AN-M-100A2, AN-M-101A2, AN-M-102A2 and M-106.
9. ARMING TIME.	Instantaneous:- 850 revolutions of the vanes, or 2241 feet of air travel. Delay:- 525 revolutions of the vanes or 1494 feet of air travel.
10. FUNCTIONING TIME	Instantaneous. Delay - .10 second.

FUZE DATA

NATIONALITY: U.S. Arm

DESIGNATION: M-103.
AN-M 103

11. PREARMING FOR DIVE BOMBING.

12. OPERATION.

[redacted]

COPY NO.
FILE NO. 2111.B2

y-Navy	INFORMATION DATE: Sept. 1943
	BOMBS USED IN: All G.P. H.E. M series bomb

Rotate arming vanes 250 revolutions in a clockwise direction or rotate arming vanes until 1/8 inch of the safety discs are exposed, whichever occurs first.

This fuze is selective short delay or instantaneous functioning time, such selections may be made after the fuzed bomb is in the plane. By inserting the setting pin (8) prevents the arming stem from rising too high by engaging the shoulder on the arming stem. In this position, the arming stem extends down far enough to catch the spring loaded detonator slider on the first step and line up the delay firing train. A spring loaded detent locks the slider in this position. Instantaneous action is accomplished by rotating the setting pin 90 degrees and inserting it in the shallow slot. This permits the arming stem to rise until its shoulder rests against the top of the cavity. This frees the detonator slider (22) to move over under its spring pressure until the firing train is lined up under the instantaneous striker (12). In this position the detonator slider is locked by a spring loaded detent.

When the bomb is released from the plane, the arming wire is withdrawn, permitting the arming vanes (1) to rotate. As the rotation of the arming vanes is transmitted through the gear reduction system (2) (gear reduction equals 65 revolutions of the vanes to 1 turn of spindle) the arming screw (5) is unscrewed from the striker block assembly (4), thus causing the vane cup to rise. When the vane cup has risen sufficiently, the safety discs (6) are forced to fly out of fuze by a steel spring (7) As the vane cup rises, the arming stem (11) rises until its shoulder rests on the setting pin (9) (delay) or until it rests on the top of the cavity (instantaneous). This action does not take place until the base plate of the internal or lower gear has risen sufficiently to permit this, since the top of the arming stem is held down by this base plate. The vanes may continue rotating until the vanes, vane cup gear reduction system and arming screw fly off. At this stage, the striker block assembly is held in the fuze body by a shear wire (8) and the setting pin (9). On impact the striker block assembly (4) is driven down, shearing the shear wire (8) and the setting pin (9), and forcing the striker (13) into the

[redacted]

FUZE DATA

COPY NO.
FILE NO. 2111.B2

NATIONALITY: U.S. Army-Navy	INFORMATION DATE: Sept. 1943
DESIGNATION: M-103. AN M-103	BOMBS USED IN: All G.P H.E. M-series bombs.

12. OPERATION. (cont'd).	firing train. (Delay or instantaneous functioning depending on position of setting pin).
13. REMARKS.	This fuze is not suitable for dive bombing unless it is pre-armed. It should never be used for masthead bombing. The AN-M-103, a modification of the M-103, is suitable for dive-bombing. Differences between M-103 and the AN-M-103. 1. Changed number of threads on arming screw from 15 single to 6½ double. 2. Changed vane construction, smaller and stronger vanes. 3. Has loose fitting lug through fuze body in striker to prevent striker from pulling out on low angle impact. 4. Contains screw threaded in cup that rides around groove in internal or lower gear. 5. AN-M-103, arming time. Instantaneous 330 revolutions. Delay 220 revolutions. 6. Note! Do not pre-arm this fuze. This fuze is suitable for dive bombing - but not for masthead bombing.

FUZE DATA [redacted] COPY NO.
FILE NO. 2111.B3

NATIONALITY: U.S. Army	INFORMATION DATE: Sept. 1943.
DESIGNATION: M-104, M-109	TYPE OF MISSILE: Fragmentation (anti-personnel) Bombs.
CLASSIFICATION: Mechanical Nose Impact.	PRINCIPAL MARKING: NOSE BOMB FUZE M-104 or M-109

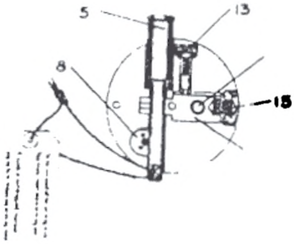

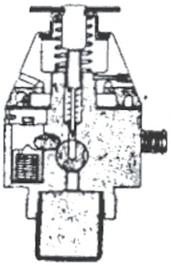

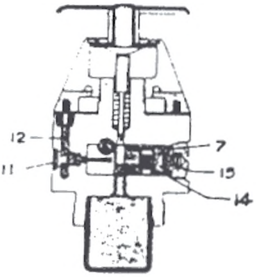

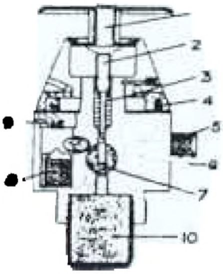

FUZE DATA [redacted] COPY NO. FILE NO. 2111.B3

NATIONALITY: U.S. Army	INFORMATION DATE: Sept. 1943.
DESIGNATION: M-104, M-109	TYPE OF MISSILE: Fragmentation (anti-personnel) Bombs.
CLASSIFICATION: Mechanical Nose Impact.	PRINCIPAL MARKING: NOSE BOMB FUZE M-104 or M-109

MARKINGS: NOSE BOMB FUZE M-104 or M-109. Typical subsidiary markings: LOT 521-2 Manufacturers mark: P.A. Picatinny Arsenal: 8 40 Month and year: all of these markings appear on top of striker head.

BOMBS USED IN: M-104 used in the 23 lb. M-40 Fragmentation Bomb. M-109 Used in the 20 lb. M-41 Fragmentation Bomb.

DATA.	M-104 and M-109
1. COLOR	Unpainted aluminum
2. OVERALL LENGTH	4.4 inches (including booster cup)
3. OVERALL WIDTH	2.2 inches
4. MATERIAL OF CONSTRUCTION	Aluminum alloy body, cadmium-plated striker and striker head, brass delay train cup.

5. PARTS
- (1) Mushroom striker head
- (2) Striker
- (3) Creep spring
- (4) Black powder train
- (5) Arming pin
- (6) Arming spring pin
- (7) Spring loaded detonator slider
- (8) Spring loaded arming striker
- (9) Primer (to set off B.P. train)
- (10) Booster
- (11) Delayed arming disc
- (12) Delayed arming Blow-out (loose black powder)
- (13) Spring loaded detent
- (14) Firing train-primer upper detonator- lower detonator
- (15) Detonator carrier spring.

6. DESCRIPTION The M-104 and M-109 are alike in construction and operation except that the M-109 has a stronger spring beneath the striker head, and the striker head disc is not as large as the M-104. The base of the fuze is threaded externally to screw into the bomb and internally to receive the lower detonator cap. The arming pin is spring loaded and passes through the fuze horizontally, being held in position by a split pin. The spring loaded arming striker is held back by the arming pin. The arming striker is set in a vertical channel with a primer cap at one end which enters into the black powder ring. The black powder ring is housed in the brass disc located between the upper cap and the body proper. The detonating striker rests on a creep spring in a vertical channel in the center of the fuze body. The striker head is free to move in the upper cap of the body. A horizontal loaded slider containing primer cap rides in a horizontal shaft extending the width of the fuze body. In an unarmed position the slider is held from beneath by a delayed arming disc crimped in position at one end of shaft.

7. POSITION AND METHOD OF FIXING IN BOMB	Screws into nose of bomb.
8. FUZES LIKELY TO BE FOUND WITH	Alone

FUZE DATA [redacted] COPY NO. FILE NO. 2111.B3

NATIONALITY: U.S. Army	INFORMATION DATE: Sept. 1943.
DESIGNATION: M-104, M-109	TYPE OF MISSILE: Fragmentation (anti-personnel) Bombs.
CLASSIFICATION: Mechanical Nose Impact.	PRINCIPAL MARKING: NOSE BOMB FUZE M-104 or M-109

9. COMPONENTS OF EXPLOSIVE TRAIN In the arming assembly- the primer cap fires the delay powder train in copper housing. The timing train: The primer cap: The upper detonator in fuze body beneath the primer: Lower detonator in cup screwed into base of fuze.

10. ARMING TIME	2.5 seconds after arming pin is removed.

11. OPERATION The M-104 is used in the 23 lb Bomb which has a parachute attachment. When the parachute opens it removes the split pin; and the arming pin (5) (spring loaded) springs out and falls away. The withdrawal of the arming pin releases the spring loaded arming striker (8) which goes forward in its channel striking a primer pellet (9). The flash of the primer pellet sets off the black powder train (4) which burns in an arc 326 degrees where it ignites a small pellet of black powder (12). The explozion blows out the delayed arming disc (11) which in turn releases the spring loaded slider (7) to move over under the detonation striker (2). Then upon impact the striker (1) head is forced down pressing the striker into the small primer cap in the slider which initiates the detonation. The M-109 is used in a bomb without the parachute and thus the split pin is removed from the arming pin when it is released from the plane. The striker head is smaller too, so that wind pressure will not detonate the bomb before impact.

12. SAFETY FEATURES If the delayed arming disc (brass colored) is not in place, the fuze is armed, so leave it alone. The M-105, with its mushroom striker head is a semi-always acting fuze and is very sensitive to touch at any angle.

NOTE * The M-104 is being replaced by the M-120 and the M-109 has been replaced by the M-110, and now by the AN-M 110a1.

FUZE DATA [redacted] COPY NO.
FILE NO: 2111.84

NATIONALITY: U.S. Army		INFORMATION DATE September 1943
DESIGNATION	PRINCIPAL MARKING	NOSE BOMB FUZE M 105
M 105	CLASSIFICATION	Mechanical Impact Nose Fuze
	TYPE OF MISSILE	H. E. Bombs

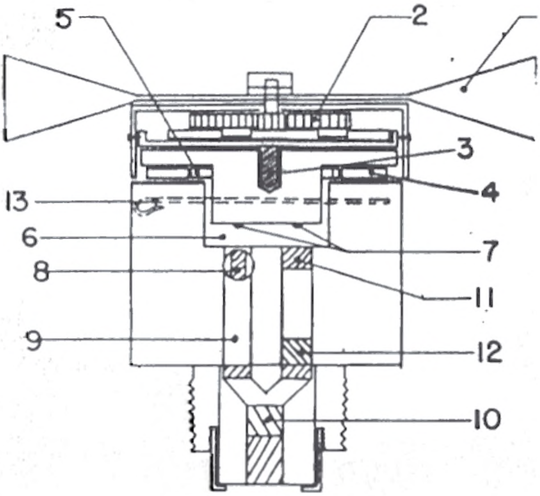

[redacted] COPY NO. ________

FUZE DATA FILE NO: 2111.B4

NATIONALITY: U.S. Army		INFORMATION DATE: September 1945
DESIGNATION	PRINCIPAL MARKING	NOSE BOMB FUZE M 105
M 105	CLASSIFICATION	Mechanical Impact Nose Fuze
	TYPE OF MISSILE	H. E. Bombs

MARKINGS: NOSE BOMB FUZE M 105 Appears on the body and the vanes. Deep Slot Delay; Shallow Slot Inst. appears on fuze body around setting pin. Subsidiary markings: P.A. 11-39, LOT 1989-1.	BOMBS USED IN: Only the modified mark series bombs.

DATA	M 105
1 COLOR	Unpainted metal
2. OVERALL LENGTH	4.3 inches
3 OVERALL WIDTH Body Arming Vanes	 2.7 inches 10.0 inches
4 MATERIAL OF CONSTRUCTION	The body, striker assembly, and safety discs are of cadmium plated steel. Gear train and arming vane hub is of brass. The detonator cup may be of brass or plated steel.

5 PARTS:

1. Arming Vanes
2. Gear Reduction System
3. Arming Screw or Spindle
4. Safety Discs
5. Steel Spring
6. Striker Block Assembly
7. Strikers (2)
8. Setting Pin and Slide
9. Instantaneous Channel
10. Detonators
11. Primer (delay)
12. Delay
13. Shear Wire

6 DESCRIPTION The upper assembly of the fuze includes the 2 vanes and a train of reduction gears (2). The reduction gears are set to the threaded arming spindle (3) which screws into the top of the striker block (6). A cap fits down around the striker block. A series of safety discs (4) are inserted between the striker block shoulder and the fuze body. There are 2 striker points (7) at the base of the striker block. A brass shear wire (13) passes through the fuze body and the striker block. The fuze body has a hollow recess in the upper portion to receive the striker block. At the bottom of this recess and directly beneath the 2 strikers are 2 channels which lead to the detonator. The delay channel contains a cap with a delay and relay element; the instantaneous channel contains a cap only which is attached to the setting pin (8). The setting pin protrudes on the outside, and if turned to instantaneous, then the cap is directly beneath the striker; but if set for delay, then the cap is turned away from the striker leaving only a hollow channel booster. The base of the fuze body is threaded internally to receive the detonator cup and externally to screw into the bomb.

7 POSITION AND METHOD OF FIXING IN BOMB	The fuze screws into the nose of the bomb hand tight.
8 FUZES LIKELY TO BE FOUND WITH	M 106, M 100, M 101, AN-M100A1, AN-M101A1, M 102, AN-M102A2, AN-M100A2, AN-M101A2, AN-M102A2.

[redacted] COPY NO. ________

FUZE DATA FILE NO. 2111.B4

NATIONALITY: U.S. Army		INFORMATION DATE September 1945
DESIGNATION	PRINCIPAL MARKING	NOSE BOMB FUZE M 105
M 105	CLASSIFICATION	Mechanical Impact Nose Fuze
	TYPE OF MISSILE	H.E. Bombs

9	COMPONENTS OF EXPLOSIVE TRAIN	No. 4 primer caps are used to initiate both trains of explosive. The delay channel and detonator assembly are as follows: delay train of 0.32 grains of black powder, the relay charge of 1.47 grains of lead azide.
10	OPERATION:	Upon being released from the plane, the vanes (1) are free to rotate. After 720 rotations of the vanes, the arming screw (3) is withdrawn from the striker block (6) and the cap and arming vanes fall free of the fuse. The safety discs (4) fall away and the fuze is armed. Upon impact, the striker block (6) is forced down cutting the shear wire (13) and bringing the striker points in contact with the firing assembly. If the fuse is set for instantaneous action, then the flash from the cap sets off the detonator and detonates the bomb before the delay can function. But if the fuze is set for delay action, then the striker point over the instantaneous channel merely contacts the empty recess with no effect; and the delay cap is fired setting off the delay and relay element, the detonator, and the bomb filler.
11	REMARKS	This fuse is obsolete, and will not fit in any bombs, but modified mark series.

[redacted]

FUZE DATA

COPY NO.
FILE NO. 2111.B5

NATIONALITY: U.S. Army	**INFORMATION DATE: Sept. 1943**
DESIGNATION: M-106, M-106 LONG, M-106A1, M-106A2	**TYPE OF MISSILE: G.P.H.E. Bombs.**
CLASSIFICATION: Mechanical Impact Tail Fuze (with Pyrotechnic delay)	**PRINCIPAL MARKING: Tail Bomb fuze M-106 or M-106 Long.**

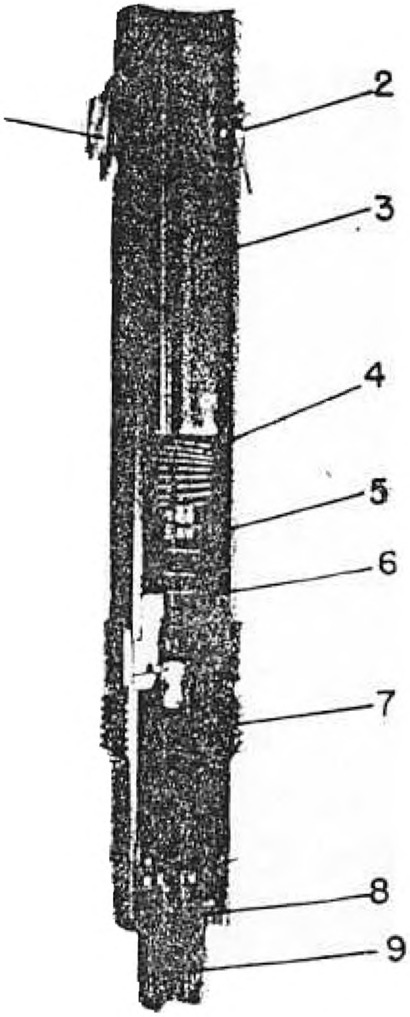

FUZE DATA [redacted] COPY NO. FILE NO. 2111;B5

NATIONALITY: U.S. Army	INFORMATION DATE: Sept. 1943
DESIGNATION: M-106, M-106 LONG, M-106A1, M-106A2	TYPE OF MISSILE: G.P.H.E. Bombs.
CLASSIFICATION: Mechanical Impact Tail Fuze (with Pyrotechnic delay)	PRINCIPAL MARKING: Tail Bomb fuze M-106 or M-106 Long.

MARKINGS: Tail Bomb fuze M-106, Tail Bomb Fuze M-106 LONG (on top closing plug of fuze) Typical subsidiary markings: P.A. 9-39, LOT 1234-5.

BOMBS USED IN: All standard G.P.H.E. Bombs of the Mark and M Series M-106 LONG used in Mark Series 2000 lb. G.P.H.E.

DATA	M-106 and M-106 LONG
1. COLOR	The fuzes are unpainted cadmium-plated steel.
2. OVERAL LENGTH (less booster)	M-106 (Regular) 9.4 inches M-106 (Long) 31.3 inches
3. OVERALL WIDTH	1.6 inches

4. MATERIAL OF CONSTRUCTION — Cadmium-plated steel except percussion cap housing which is brass.

5. PARTS

(1) Arming pin spring
(2) Arming pin
(3) Striker block
(4) Creep spring
(5) Striker
(6) Primer
(7) Safety fuze or delay train
(8) Upper detonator
(9) Lower detonator

6. DESCRIPTION — These fuzes consist of a hollow steel striker block holder closed at the upper end by a threaded plug. This holder contains the striker block which is of steel with two grooves for air-pressure release. Both the holder and the striker block have a 1/2 inch hole drilled through near the top to receive the spring-loaded arming pin. A brass fitting housing the percussion primer is threaded into the base of the holder. Between the striker block and percussion cap is a steel creep spring. The brass fitting is externally threaded to receive a steel sleeve into which is placed a length of safety fuze with aluminum collars at top and bottom to correctly position the fuze. The sleeve is externally threaded to screw into the bomb. A steel bushing is screwed into the sleeve and the detonator cap is secured to the bushing by a collar.

7. POSITION AND METHOD OF FIXING IN BOMB — The fuze is screwed into the base plate of the bomb, hand-tight and extends up through the center of the tail assembly.

8. FUZES LIKELY TO BE FOUND WITH — Normally used with M-103 or M-105 Nose fuze.

9. COMPONENTS OF EXPLOSIVE TRAIN — The percussion primer is a No. 26 cap. The primer of the safety fuze is black powder. The safety fuze is pyrotechnic mixture. The detonator is in three parts: Black powder pellet: lead azide pellet; and a tetryl pellet. The booster is the M-104 auxiliary booster of tetryl in a bakelite case.

FUZE DATA [redacted] COPY NO. FILE NO. 2111.B5

NATIONALITY: U.S. Army	INFORMATION DATE: Sept. 1943
DESIGNATION: M-106, M-106 LONG, M-106A1, M106A2	TYPE OF MISSILE: G.P.H.E. Bombs.
CLASSIFICATION: Mechanical Impact Tail Fuze (with Pyrotechnic delay)	PRINCIPAL MARKING: Tail Bomb Fuze M-106 or M-106 LONG

10. ARMING AND FUNCTIONING TIME — These fuzes arm instantaneously on removing of the arming pin but have delay of 45 seconds (may be as long as 60 seconds but could be varied considerably) in functioning after impact due to the safety fuze,

11. OPERATION — On withdrawing of the arming pin when the bomb is released the fuze is armed. On impact the striker block 'sets forward' overcoming the creep spring and detonating the cap. The cap ignites the black powder pellet which fires the safety fuze. When the safety has burned its entire length the second black powder pellet which is in the detonator is fired in turn igniting the remainder of the detonator.

M 106A1 — Reduced functioning time from 45-60 seconds to 8-11 seconds.

M 106A2 — Reduced to functioning 3-5 seconds.

12. REMARKS — This fuze is dangerous to handle if the arming pin is out because it has a heavy striker and a weak creep spring.

<u>Never use this fuze for horizontal, glide or dive bombing if there are any fuzes of the M-100 series present.</u>

<u>Never use this fuze for skip or masthead bombing if there are any fuzes of the M-112 or AN-M 115 series present.</u>

Use the M-106 fuze for skip bombing, if there are no M-112 through M-117 present, rather than using one of the M-100 series.

[redacted]

FUZE DATA

COPY NO.
FILE NO. 2111.B6

NATIONALITY: U.S. Army	INFORMATION DATE: Sept. 1943
DESIGNATION: M-108, and M-108 modified.	TYPE OF MISSILE: Chemical bomb.
CLASSIFICATION: Mechanical Impact - Nose Fuze	PRINCIPAL MARKING: Nose Bomb Fuze M-108

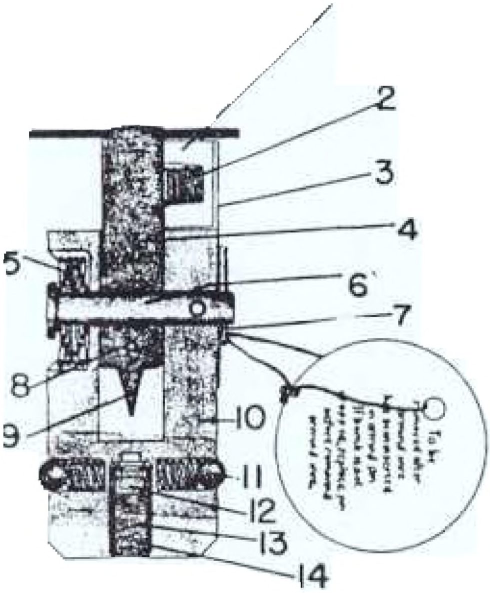

FUZE DATA [redacted] COPY NO.
FILE NO. 2111.B6

NATIONALITY: U.S. Army	INFORMATION DATE: Sept. 1943
DESIGNATION: M-108, and M-108 modified.	TYPE OF MISSILE: Chemical bomb.
CLASSIFICATION: Mechanical Impact - Nose Fuze	PRINCIPAL MARKING: Nose Bomb Fuze M-108

MARKINGS: Nose Bomb Fuze M-108 appears on striker head.

BOMBS USED IN: 100 lb. M-47 Series Chemical Bombs

DATA	M-108 & M-108 Mod.
1. COLOR	Brass body; unpainted steel striker.
2. OVERALL LENGTH	2.6 inches
3. OVERALL WIDTH	1.3 inches
4. MATERIAL OF CONSTRUCTION	Cadmium or zinc plated steel striker. Brass fuze body.

5. PARTS

(1) Safety Block
(2) Safety block spring
(3) Safety block holder
(4) Striker
(5) Arming pin spring
(6) Arming pin
(7) Arming wire or cotter
(8) Shear wire
(9) Firing pin
(10) Fuze body
(11) Locking balls and springs
(12) Primer
(13) Upper detonator
(14) Lower detonator

6. DESCRIPTION The M-108 and M-108 Modified are the same in construction and principle, the only difference being that the M-108 Modified has a safety block (1) inserted between the striker head and the fuze body. The body is cylindrical with a channel in the center to receive the striker (4). The striker head protrudes 0.6 inches above the fuze body in the unarmed position. A hole passes horizontally through the fuze body and the striker. The spring loaded arming pin (6) is inserted in this hole. The M-108 Modified has a small metal plate (3) which is placed behind the arming wire (7) and extends up to the striker head to hold the safety block in place. A light copper shear wire (8) passes through the striker (4). The primer (12) is a push fit into the bottom of the fuze below the striker. Two spring loaded steel balls (11) protrude on each side.

7. POSITION AND METHOD OF FIXING IN BOMB	The fuze is pushed down into the nose of the bomb and held there by two spring loaded ball bearings which protrude from the side of the fuze.
8. FUZES LIKELY TO BE FOUND WITH	Alone

9. COMPONENTS OF EXPLOSIVE TRAIN The primer cap at the base of the fuze body; full length of tetryl burster used in M-46 and M-47 Bombs.

10. OPERATION Upon being released from the plane, the arming wire (7) is withdrawn, allowing the spring loaded arming pin (5) to spring out and fall away. Also the metal strip (3) is released, allowing the safety block (1) to fall out; the fuze is then completely armed. Upon impact, the striker (4) is forced down, breaking the shear wire (8) and the firing pin (9) strikes the primer cap (12) detonating the bomb.

FUZE DATA [redacted] COPY NO.
FILE NO. 2111.B6

NATIONALITY: U.S. Army	INFORMATION DATE: Sept. 1943
DESIGNATION: M-108, and M-108 Modified.	TYPE OF MISSILE: Chemical Bomb.
CLASSIFICATION: Mechanical Impact - Nose Fuze.	PRINCIPAL MARKING: Nose Bomb Fuze M-108.

11. ARMING TIME FUNCTIONING TIME	Instantaneous on release from plane. Instantaneous.
NOTE:	The M-126 is replacing the M-108

FUZE DATA [redacted] FILE NO. 2111.B7 COPY NO.

NATIONALITY: U.S. Army-Navy	INFORMATION DATE: Sept. 1943
DESIGNATION: M-110 AN-M-110A1	TYPE OF MISSILE: Fragmentation (anti-personnel) Bombs.
CLASSIFICATION: Mechanical Impact - Nose	PRINCIPAL MARKING: Nose Bomb Fuze M-110
MARKINGS: Nose Bomb Fuze M-110 found on body of fuze.	
BOMBS USED IN: 20 lb M-41	

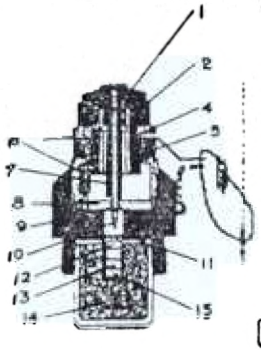

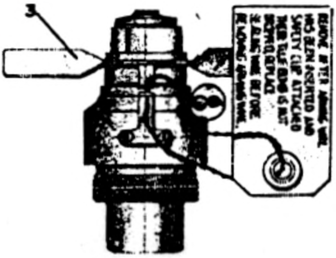

FUZE DATA [redacted] FILE NO. 2111.B7 COPY NO.

NATIONALITY: U.S. Army-Navy	INFORMATION DATE: Sept. 1943
DESIGNATION: M-110 AN-M-110A1	TYPE OF MISSILE: Fragmentation (anti-personnel) Bombs.
CLASSIFICATION: Mechanical Impact - Nose	PRINCIPAL MARKING: Nose Bomb Fuze M-110
MARKINGS: Nose Bomb Fuze M-110 found on body of fuze.	
BOMBS USED IN: 20 lb M-41	

DATA	M-110
1. COLOR	Unpainted Aluminum
2. OVERALL LENGTH	3.5 inches (with booster)
3. OVERALL WIDTH	Fuze body - 1.7 inches Arming vanes 3.6 inches
4. MATERIAL OF CONSTRUCTION	Steel safety blocks and striker; Aluminum body.

5. PARTS

(1) Striker head
(2) Safety Blocks
(3) Arming vanes
(4) Stationary gear
(5) Central arming gear (Movable Gear)
(6) Idler Gear
(7) Striker Spring
(8) End Plate
(9) Retainer Pin
(10) Striker
(11) Washer
(12) Primer
(13) Upper detonator
(14) Lower detonator
(15) Booster

6. DESCRIPTION The body is divided into two pieces. The upper piece houses the striker assembly with the striker head (1), striker (10), spring (7), the three safety blocks (2), the two arming vanes (3), and train of gears which arm the fuze. The three safety blocks (2) are located between the striker head (1) and the body. These blocks have a groove on the inside of which fits over the shaft of the central arming gear (5). The upper part of the body screws into the lower portion of the body. The lower portion houses the primer (12) and is threaded internally and externally at the base. The internal threads are to receive the booster cup and the external to screw the fuze into the bomb. The arming vanes are prevented from rotating by an assembly which is hooked to the vanes in one part and the other hooked to the lower part of the body. These two pieces are held in place by the arming wire.

7. POSITION AND METHOD OF FIXING IN BOMB	The fuze screws into the nose of the bomb.
8. FUZES LIKELY TO BE FOUND WITH	Always found alone.

9. COMPONENTS OF EXPLOSIVE TRAIN The primer is located in the lower housing; the flash from this primer sets off the detonator retained in the cup screwed into the base of the fuze. The cup also contains the tetryl booster.

FUZE DATA [redacted] FILE NO. 2111.B7 COPY NO.

NATIONALITY: U.S. Army-Navy	INFORMATION DATE: Sept. 1943
DESIGNATION: M-110 AN-M-110A1	TYPE OF MISSILE: Fragmentation (Anti-personnel) Bombs.
CLASSIFICATION: Mechanical Impact - Nose.	PRINCIPAL MARKING: Nose Bomb Fuze M-110

10. OPERATION Upon being released from the plane, the arming wire is withdrawn allowing the vanes (3) to rotate. The rotation of the vanes transmits motion to the gears. The central arming gear (5) which holds the safety blocks (2) is withdrawn into the channel of the body, and, after approximately 570 rotations of the vanes (3), the gear (5) is withdrawn enough to allow the safety blocks (2) to fall free and the fuze is armed. Upon impact, the striker (10) overcomes the creep spring (7) and impacts the primer (12) which detonates the booster (15) and filler of the bomb.

11. ARMING TIME FUNCTIONING TIME	570 revolutions of vanes Instantaneous

AN-M 110A1

Changes from M-110
(1) Reduced number of teeth on gears - stationary gear reduced from 56 teeth to 33 teeth.

(2) Has horseshoe disc rather than three safety blocks. Central arming gear does not fit in groove in horseshoe disc, but sleeve prevents disc from flying out until it is lowered.

(3) Vane construction - shorter, smaller, and stronger to facilitate packing.

Arming Time - 340 revolutions of vanes.
Functioning Time - Instantaneous.

FUZE DATA [redacted]

FILE NO. COPY NO. 2142 B2

NATIONALITY: U.S. Army	INFORMATION DATE: Sept. 1943
DESIGNATION: M-111, M 111A1, M-111A2	PRINCIPAL MARKING: FLARE FUZE MECHANICAL TIME, M-111
CLASSIFICATION: Mechanical Time Nose Fuze-Aerial Burst.	TYPE OF MISSILE: Flares, Flash Bombs, Fragmentation.

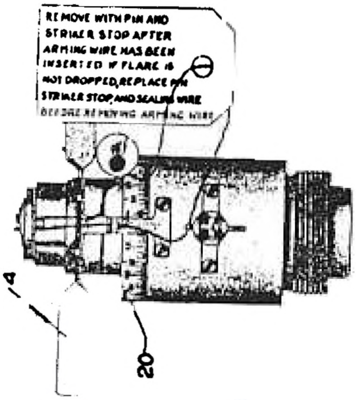

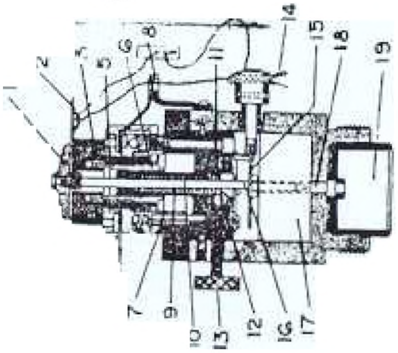

FUZE DATA [redacted] COPY NO.
FILE NO. 2142 B2

NATIONALITY: U.S. Army	INFORMATION DATE: Sept. 1943
DESIGNATION: M-111, M 111A1, M-111A2	PRINCIPAL MARKING: FLARE FUZE MECHANICAL TIME, M-111
CLASSIFICATION: Mechanical Time Nose Fuze-Aerial Burst.	TYPE OF MISSILE: Flares, Flash Bombs, Fragmentation.

MARKINGS: FLARE FUZE MECH. TIME M-111 appears on side of body. A graduated scale from 15 to 93 appears on the shoulder beneath the arming vanes. Subsidiary markings: P.A. 5-12, LOT 2205-2 are found on the body.

BOMBS USED IN
1. Parachute flare
2. M43-A Parachute flare
3. M46-P Photoflash Bomb.

DATA

1. COLOR	Unpainted aluminum
2. OVERALL LENGTH	4.2 inches
3. OVERALL WIDTH	1.6 inches
4. MATERIAL OF CONSTRUCTION	Aluminum alloy except for steel striker which is zinc or cadmium plated.

5. PARTS

(1) Striker Head	(11) Striker Shoulder
(2) Vane locking device	(12) Cocking Pin
(3) Safety Blocks	(13) Locking Screw
(4) Arming Vanes	(14) Arming Pin
(5) Stationary Gear	(15) Timing disc
(6) Central arming gear (moveable gear)	(16) Striker
(7) Idler Gear	(17) Timing clock mechanism
(8) Safety Bracket	(18) Primer cap
(9) Striker Spring	(19) Booster
(10) Striker	(20) Scale for time setting

6. DESCRIPTION: The graduated scale for time setting (20) around the M 111 reads from 15 to 93 seconds. The fuse is divided into two parts: the lower portion contains the clockwork mechanism (17). The clockwork is pre-wound and has high-frequency type vibration. The timing disc (15) sets on top of the clockwork. There is a slot cut in the outer circumference of the timing disc. The spring-loaded arming pin (14) sets in this slot to prevent the disc from turning (safety feature). The upper part of the fuse slides down into the recess of the lower portion and is secured there by pressure exerted by the three set screws. The cocking pin (12) is located on the base of the upper portion and is connected by a series of levers to the timing disc and falls in a slot in the disc after a predetermined time has elapsed. The spring loaded striker (16) and the train of arming gears are housed in the upper portion. The striker head (1) screws onto the striker spindle; three safety blocks (3) are placed under the striker head in an assembly like the M 110. There are two arming vanes (4) which operate the arming gears (5, 6 & 7. The lock screw (13) protrudes from one side of the fuze, and the arming pin (14 from the other. In addition to the arming pin, this fuze incorporates the safety bracket (8) which is attached to the vane assembly in one part and to body portion in the other part. The arming wire then passes thru the arming pin and the two brackets, thus not only preventing the clock from working but also preventing the rotation of the vanes until the wire is withdrawn.

FUZE DATA [redacted] COPY NO.
FILE NO. 2142 B2

NATIONALITY: U.S. Army	INFORMATION DATE: Sept. 1943
DESIGNATION: M-111, M-111A1, M-111A2	PRINCIPAL MARKING: FLARE FUZE MECHANICAL TIME, M-111
CLASSIFICATION: Mechanical Time Nose Fuze-Aerial Burst.	TYPE OF MISSILE: Flares, Flash Bombs, Fragmentation.

7. POSITION AND METHOD OF FIXING IN BOMB	The fuze is screwed into the nose of the bomb.
8. FUZES LIKELY TO BE FOUND WITH	Found alone.
9. COMPONENTS OF EXPLOSIVE TRAIN	The primer cup extends into the booster cup. The booster contains 70 grains of Black Powder.
10. ARMING TIME FUNCTIONING TIME	570 revolutions of the vanes Aerial burst after air travel of 15 to 93 seconds as set beforehand. Aerial burst is accurate as set plus or minus 1 second.

11. OPERATION The time interval is set by turning the upper part of the fuze to the desired setting on the graduated sacle (20) independently of the lower portion and tightening the lock screw (13). Upon being released from the plane, the arming wire is withdrawn releasing the vanes (4) and the arming pin (14). The vanes (4) rotate and at approximately 570 revolutions, the central arming gear(6) is withdrawn freeing the safety blocks (3) to fly out, and freeing the striker (10). As the arming pin (14) is released, the timing disc (15) starts rotating. After the predetermined set time has elapsed, the slot in the disc is opposite the timing disc lever. Through a seriesof levers, pressure forces this timing disc lever to fall into this slot. This movement through this same system of levers frees the cocking pin (12) to rotate from under the shoulder of the spring cocked striker (10). With the safety blocks (3) out, the striker is now forced down striking the primer cap (18). However, if the timing assembly should fail, the bomb would still detonate on impact, because the striker would be forced down, shearing any obstruction and firing the primer.

DESIGNATION
M 111 AI - Changes from M-111.

1. Changed setting time from 15 to 93 seconds to 5 to 93 seconds. Thus, aerial burst could take place 5 seconds after bomb was released.

ARMING TIME	570 revolutions of vanes
FUNCTIONING TIME	5 to 93 seconds after release from plane.

DESIGNATION
M-111 A2

1. Adapted horseshoe safety block instead of three safety blocks with grooves. Horseshoe collar held on by sleeve or central arming gear.

2. Reduced number of teeth on gears-stationary gear gear reduced from 56 teeth to 33 teeth. Central arming (moveable) gear reduced from 57 teeth to 34 teeth.

FUZE DATA [redacted] COPY NO. 2638
FILE NO. 2142 B2

NATIONALITY: U.S. Army	INFORMATION DATE: Sept. 1943
DESIGNATION: M-111, M-111A1, M-111A2	PRINCIPAL MARKING: FLARE FUZE MECHANICAL TIME, M-111
CLASSIFICATION: Mechanical Time Nose Fuze-Aerial Burst.	TYPE OF MISSILE: Flares, Flash Bombs, Fragmentation

DESIGNATION
M-III A2 (Contd)

3. Strengthened gears.

4. Vane construction-shorter, smaller, and stronger to facilitate packing.

ARMING TIME	340 revolutions of vanes.
FUNCTIONING TIME	5 to 93 seconds after release from plane.

[redacted] COPY NO.

FUZE DATA FILE NO:

NATIONALITY: U.S. Army		INFORMATION DATE: September 1943
DESIGNATION	PRINCIPAL MARKING	M 112, M 113, M 114
M 112 M 113 M 114	CLASSIFICATION	Mechanical Impact-Tail Fuze
	SPECIAL MISSION	Masthead Bombing Only

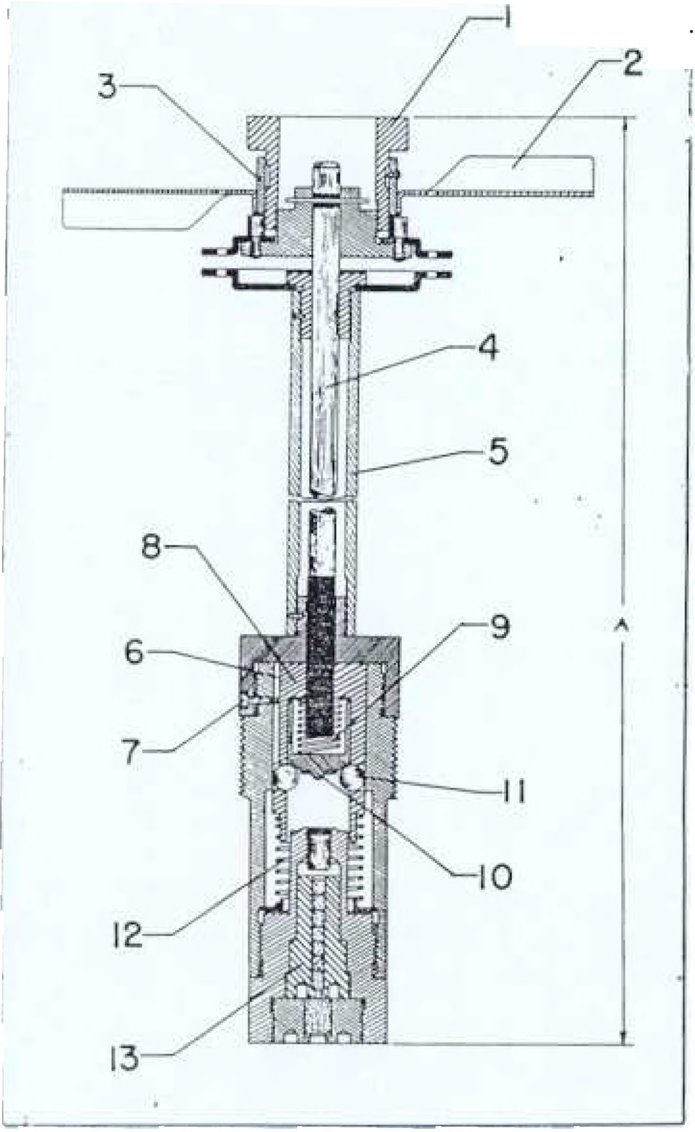

COPY NO. 2638

FUZE DATA [redacted]ILE NO:

NATIONALITY: U.S. Army		INFORMATION DATE September 1943
DESIGNATION	PRINCIPAL MARKING	M 112, M 113, M 114
M 112 M 113 M 114	CLASSIFICATION	Mechanical Impact-Tail Fuze
	SPECIAL MISSION	Masthead Bombing Only

DATA	M 112	M 113	M 114
1 COLOR	Unpainted Steel		
2 OVERALL LENGTH	9.6 inches	11.6 inches	15.6 inches
3 OVERALL WIDTH BODY VANES	 2.3 inches 5.0 inches	 2.3 inches 5.0 inches	 2.3 inches 5.0 inches
4 MATERIAL OF CONSTRUCTION	Cadmium Plated Steel		

5 PARTS

1. Vane Nut
2. Arming Vanes
3. Vane Carrier
4. Arming Stem
5. Tube
6. Keyway
7. Key
8. Inertia Sleeve
9. Firing Pin Spring
10. Firing Pin
11. Firing Pin Locking Balls
12. Creep Spring
13. M-16 Primer-Detonator

6 POSITION AND METHOD OF FIXING IN BOMB	Screwed into the base plate of the bomb hand tight.
7 FUZES LIKELY TO BE FOUND WITH	Normally used with the M-118 in the nose.
8. COMPONENTS OF EXPLOSIVE TRAIN	Primer, compression chamber, igniter charges (2), delay, relay, upper detonator and lower detonator.
9 ARMING AND FUNCTIONING TIME	These fuzes arm after 20-25 revolutions of the vanes. A selective functioning time of 4 to 5 seconds of 8 to 11 seconds is provided with each fuze by shipping two M 16 primer-detonators. Air travel 75 to 100 feet.

10 OPERATION When the bomb is dropped, the arming wire is withdrawn, permitting the arming vanes (2) to rotate. This rotation is transmitted directly to the arming stem (4), which is unscrewed from the inertia sleeve (8). After 20 to 25 rotations of the vanes a key (7) in the fuze body fits into the keyway (6) in the inertia sleeve (8) and prevents the sleeve (8) from rotating as the arming stem (4) is unscrewed. Thus, the cocked firing pin (10) is held up only by the locking balls (11). The locking balls are held in the inertia sleeve which is held up by a creep spring. On impact, the inertia sleeve is forced down against its creep spring (12) until the balls (11) fall back in the recessed portion of the fuze body. This frees the firing pin (10) which sets off the firing train in the primer-detonator (13).

11 REMARKS This fuze will function on impact angle of 5° and gives positive action because of its cocked firing pin. This fuze is unsafe for Carrier landings. Functioning time of 8-11 sec. used against land targets only, 4-5 sec. delay against sea targets. In taking fuze apart remember it has cocked firing pin. For carrier operations, use the AN M115, AN M116, AN M117.

FUZE DATA [redacted] FILE NO. COPY NO.

NATIONALITY: U.S. Army-Navy	INFORMATION DATE: Sept. 1943
DESIGNATION: AN-M 115,116,117	PRINCIPLE MARKING: AN-M 115, AN-M 116, AN-M 117
CLASSIFICATION: Mechanical Impact - Tail Fuze	SPECIAL MISSION: Masthead bombing from carriers.
MARKINGS: AN-M 115 AN-M 116 AN-M 117	BOMBS USED IN: AN-M 115 - 100, 250, 300 lb. AN-M 116 - 500, 600 lb. AN-M 117 - 1000, 2000 lb.

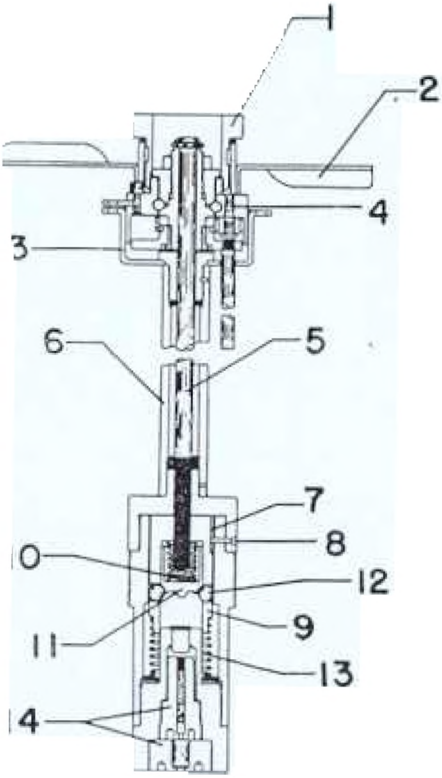

COPY NO. 2638

FUZE DATA [redacted] FILE NO.

NATIONALITY: U.S. Army-Navy	INFORMATION DATE: Sept. 1943
DESIGNATION: AN-M 115,116,117	PRINCIPLE MARKING: AN-M 115, AN-M 116, AN-M 117
CLASSIFICATION: Mechanical Impact - Tail Fuze	SPECIAL MISSION: Masthead bombing from carriers.
MARKINGS: AN-M 115 AN-M 116 AN-M 117	BOMBS USED IN: AN-M 115 - 100, 250, 300 lb. AN-M 116 - 500, 600 lb. AN-M 117 - 1000, 2000 lb.

DATA	AN-M 115	AN-M 116	AN-M 117
1. COLOR	Unpainted Metal		
2. OVERALL LENGTH	10.0 in.	12.0 in.	16.0 in.
3. OVERALL WIDTH Body Vanes	 2.3 in. 5.0 in.	 2.3 in. 5.0 in.	 2.3 in. 5.0 in.
4. MATERIAL OF CONSTRUCTION	Cadmium painted Steel		

5. PARTS
- (1) Vane Nut
- (2) Arming Vanes
- (3) Vane Carrier
- (4) Gear Reduction System
- (Idler Gear)
- (Moveable Gear)
- (Stationary Gear)
- (5) Arming Stem
- (6) Tube
- (7) Keyway
- (8) Key
- (9) Inertia Sleeve
- (10) Firing Pin Spring
- (11) Firing Pin
- (12) Firing Pin Locking Balls
- (13) Creep Spring
- (14) M-16 Primer Detonator

6. DIFFERENCE BETWEEN M-112, M-113, M-114	The AN-M 115, AN-M 116, AN-M 117 are the same fuzes as the M-112, M-113, and M-114, respectively, except the former incorporate the same gear reduction system as the AN-M 100A2 series.
7. POSITION AND METHOD OF FIXING IN BOMB	Screwed into base plate of bomb hand-tight.
8. FUZES LIKELY TO BE FOUND WITH	Used with the M-119 only in carrier based planes (M-119 is not perfected as yet). Can be used with M-118 in land based planes.
9. ARMING TIME	150-170 revolutions of vanes - 400-650' air travel. 650' accomplished at 130' altitude at 150 knots, or at 80' at 200 knots.
10. FUNCTIONING TIME	A selective functioning time of 4-5 seconds or 8-11 seconds is provided with each fuze by shipping two M-16 Primer Detonators, one with each of these delays.
11. COMPONENTS OF EXPLOSIVE TRAIN	Primer, compression chamber, igniter charges (2) relay, delay, upper detonator, and lower detonator.

12. OPERATION The operation of these fuzes is the same as the M-112, M-113, M-114 except it incorporates the gear reduction system of the AN-M 100A2 series which requires 150-170 revolutions of the vanes.

M 16 - PRIMER DETONATOR

The M-16 Primer Detonator is used in the M-112, M-113, M-114, AN-M-115, AN-M-116, and AN-M-117 fuzes only. It cannot be used in any other fuzes, and it is the only primer detonator that can be used in the above listed fuzes. The M-14 primer detonator will not fit into M-112, M-113, M-114, AN-M 115, AN-M 116, and AN-M 117 fuzes. The M-16 can be distinguished from the M-14 by a groove in the knurled surface that covers the last 9/16 inch of the base.

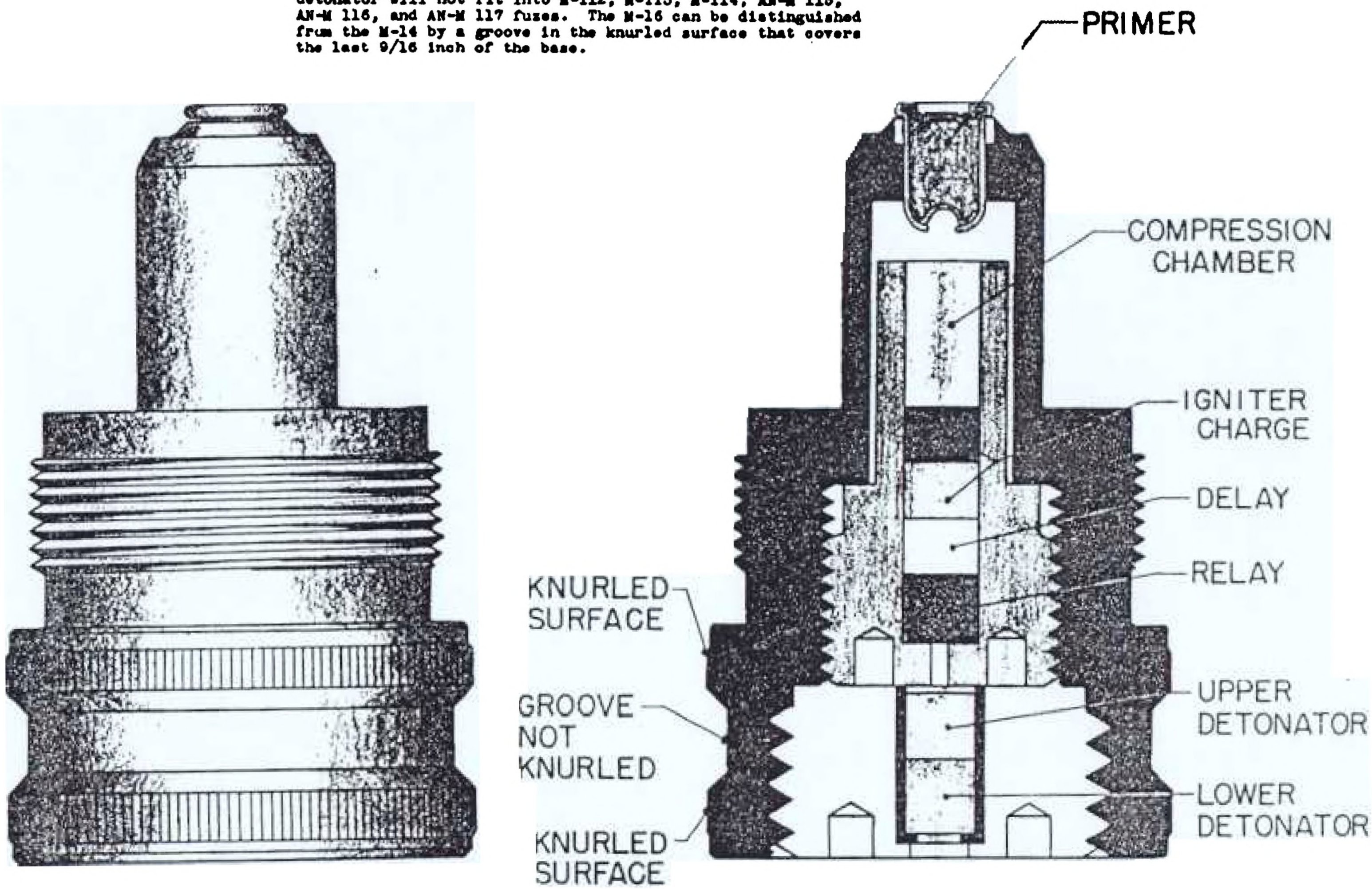

FUZE DATA [redacted] FILE NO: COPY NO.

NATIONALITY: U.S. Army		INFORMATION DATE: Sept. 1943
DESIGNATION	PRINCIPAL MARKING	M-123, M-124, M-125
M-123 M-124 M-125	CLASSIFICATION	Time, tail fuze
	TYPE OF MISSILE	H.E. Bombs
MARKINGS: M-123, M-124, or M-125. Appears on vanes and may be stamped on body. The delay and lot number are stamped on body.		BOMBS USED IN: M-123-AN-M 30, M31, AN-M57 M-124-AN-M 43, M32, AN-M64 AN-M 58, AN-M58 A1 M-125-AN-M 44, M44, M33, AN-M65, AN-M 34, AN-M 66, AN-M 59.

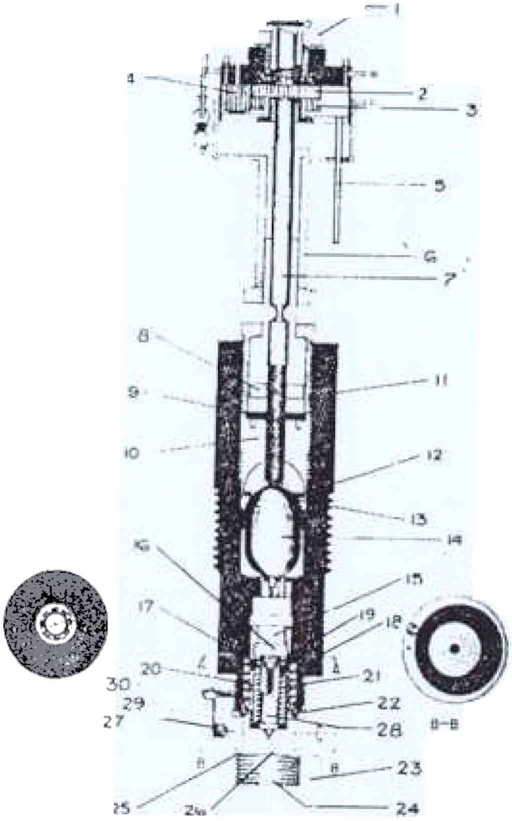

2638

[redacted]

M 16 - PRIMER DETONATOR

The M-16 Primer Detonator is used in the M-112, M-113, M-114, AN-M-115, AN-M-116, and AN-M-117 fuzes only. It cannot be used in any other fuzes, and it is the only primer detonator that can be used in the above listed fuzes. The M-14 primer detonator will not fit into M-112, M-113, M-114, AN-M 115, AN-M 116, and AN-M 117 fuzes. The M-16 can be distinguished from the M-14 by a groove in the knurled surface that covers the last 9/16 inch of the base.

COMPONENTS OF THE EXPLOSIVE TRAIN:

- Primer
- Compression Chamber
- Ignitor Charger (2)
- Delay
- Relay
- Upper Detonator
- Lower Detonator

DELAY: The M-16 primer detonator has an optional delay of 4 to 5 seconds or 8 to 11 seconds. The above listed fuzes are shipped with the 8 to 11 second delay, but a primer detonator with 4 to 5 second delay is shipped with each fuze. The delay of each detonator is stenciled on its base.
The 8 to 11 second delay is to be used against land targets only, and the 4 to 5 second against either land or sea targets.

FUZE DATA [redacted] FILE NO. COPY NO.

NATIONALITY: U.S. Army	INFORMATION DATE: Sept 1943.
DESIGNATION: M-120	PRINCIPAL MARKING: Nose Bomb Fuze M-120
CLASSIFICATION: Mechanical Impact Fuze.	

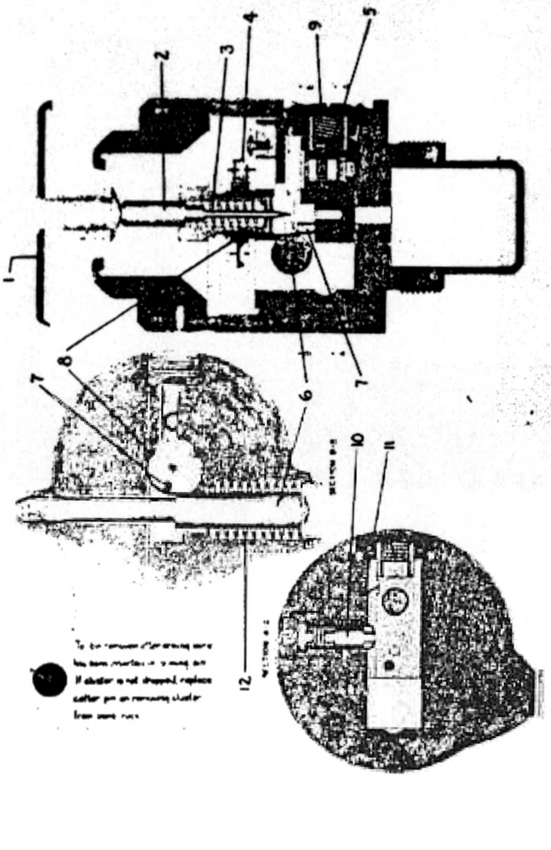

FUZE DATA [redacted] FILE NO. COPY No. 2638

NATIONALITY: U.S. Army	INFORMATION DATE: Sept 1943.
DESIGNATION: M-120	PRINCIPAL MARKING: Nose Bomb Fuze M-120
CLASSIFICATION: Mechanical Impact Fuze.	
BOMBS USED IN: M-40 parachute fragmentation bombs.	
DATA	M-120
1. COLOR	Unpainted aluminum
2. OVERALL LENGTH	4.4 inches
3. OVERALL WIDTH	2.2 inches
4. MATERIAL OF CONSTRUCTION	Aluminum alloy body, cadmium plated striker & striker head.

5. PARTS
(1) Striker head
(2) Firing pin
(3) Firing spring
(4) 2½ sec. clockwork
(5) Sliding primer detonator assembly
(6) Arming pin
(7) Slider lug
(8) Timing shaft
(9) Sliding detonator spring
(10) Detonator locking detent
(11) Groove for locking detent
(12) Arming pin spring

6. OPERATION The opening of the parachute on the M-40 fragmentation bomb withdraws the arming wire from the arming pin (6) which is ejected by the arming pin spring (12). The ejection of the arming pin releases the semi-circular extension on the timing shaft (8) which is rotated by clockwork (4) for 180 degrees. Riding against the inside of the semi-circle under pressure of the sliding detonator spring (9) is the slider lug (7). When the extension on the timing shaft rotates its full 180 degrees, the slider lug is released allowing the spring loaded primer detonator assembly (5) to move under the firing pin (2) where it is locked in position by the detonator locking detent (10) which rides into groove (11). This action requires roughly 2½ seconds. On impact the striker head (1) drives the firing pin into the primer detonator firing the fuze.

7. REMARKS: This fuze with mechanical arming delay replaces the M-104 which had pyrotechnic arming delay.

[redacted] COPY NO.

FUZE DATA FILE NO:

NATIONALITY: U.S. Army		INFORMATION DATE: Sept. 1943	
DESIGNATION	PRINCIPAL MARKING	M-123, M-124, M-125	
M-123 M-124 M-125	CLASSIFICATION	Time, tail fuze	
	TYPE OF MISSILE	H.E. Bombs	
MARKINGS: M-123, M-124, or M-125. Appears on vanes and may be stamped on body. The delay and lot number are stamped on body.		BOMBS USED IN: M-123-AN-M 30, M31, AN-M57 M-124-AN-M 43, M32, AN-M64 AN-M 58, AN-M58 A1 M-125-AN-M 44, M44, M33, AN-M65, AN-M 34, AN-M 66, AN-M 59.	

DATA

1. COLOR	
2 OVERALL LENGTH	M-123 - 9.6 in., M-124 11.6 in., M-125 - 15.6 in.
3 OVERALL WIDTH	
4 MATERIAL OF CONSTRUCTION	Zinc plated and dichromate coated steel.

5 DESCRIPTION: The M-123, M-124, M-125 tail fuzes are designed for any of the Army-Navy standard general purpose and semi-armor piercing bombs. They are time fuzes which operate in 1, 3, 6, 12, 24, 36, 72, and 144 hours and are designed to render airfields, dock and industrial installations inoperative for these periods of time. The fuzes differ only in length of the arming stem cases. The fuze body is composed of three pieces - the stem case (6), upper fuze body (11), and lower fuze body (23). The stem case (6), which is threaded and staked to the upper fuze body (11), contains the gear assembly and the arming stem (7). The upper fuze body (11) contains cotton waste (15) and the acetone filled glass ampoule (14) which is broken by the arming stem (7) as it screws down in arming. The lower fuze body (23) contains the striker assembly and the M-19 primer-detonator (24). The striker assembly consists of a spring loaded firing pin (28) which is held cocked by locking balls (19) bearing against a celluloid ring (17). The rest of the striker assembly consists of a firing pin sleeve (20) which is held spring loaded by locking balls (22) bearing against a flange on the lower fuze body (23). The bottom of the lower fuze body (23) is internally threaded to receive the M-19 primer-detonator (24).

6 INSTALLATION:
a. Make sure that the upper fuze body (11) and the lower fuze body (23) are screwed together well, hand tight. Insert holder closing disc (aluminum) (26), holder sealing washer (lead) (25), and the M 19 primer detonator (24) in the base of the fuze. Tighten these parts with a wrench making sure that the anti-withdrawal locking ball (27) or its groove is not damaged.
b. Remove thumb screw (30) and ball clip (29). The anti-withdrawal locking ball (27) should move freely in its groove. At this point do not attempt to unscrew the upper fuze body (11) from the lower fuze body (23) as it will detonate.
c. Screw fuze into the bomb by hand. Do not under any circumstances attempt to withdraw the fuze during or after it has been installed. Separation of the upper fuze body (11) from the lower fuze body (23) by as much as 3/64 of an inch will cause it to detonate.

[redacted] COPY NO.

FUZE DATA FILE NO:

NATIONALITY: U.S. Army		INFORMATION DATE: Sept 1943	
DESIGNATION	PRINCIPAL MARKING	M-123, M-124, M-125	
M-123 M-124 M-125	CLASSIFICATION	Time, tail fuze.	
	TYPE OF MISSILE	H.E. Bombs	

DATA

6 INSTALLATION: (CON'T)
d. Remove the cotter pin and insert arming wire. Remove safety pin after arming wire is inserted.
e. Install vanes and secure with the locking nut. Place two Fahnestock clips over the end of the arming wire.
f. The fuze should not be installed an appreciably long time before takeoff especially if the temperature exceeds 120 degrees F.

7 FUZES LIKELY TO BE FOUND WITH	None. The T 30 nose anti-disturbance fuze is in the process of development for use with these fuzes.
8 COMPONENTS OF EXPLOSIVE TRAIN	Primer-lead azide; Upper-lower detonator-tetryl.
9 ARMING AND FUNCTIONING TIME	These fuzes arm after 150-170 revolutions of the arming vane. Functioning time is determined by the concentration of the acetone solution and the use of extra celluloid discs.

10 OPERATION: The stem case (6) and gear system of this fuze is identical with that of the AN-M 100 A2 fuze except that the arming stem (6) has a right hand thread so that it will screw down instead of out. The rotation of the vanes causes the arming stem (6) to screw down on and break a glass ampoule (14) filled with acetone. The acetone leaks into some cotton waste (15), then to a celluloid disc (16) (this disc is present only in fuzes with a delay of more than 12 hours), and then to a celluloid ring (17) which holds a spring loaded firing pin (28). When the celluloid ring (17) has been softened by the acetone the firing pin locking balls (19) are freed and the firing pin (28) is driven by its spring (21) into the primer-detonator (24). If the enemy attempts to withdraw the fuze the anti-withdrawal locking ball (27) will ride into the shallow part of its groove and jam against the wall of the adapter booster. This will cause the lower fuze body (23) to reamin locked in the bomb while the rest of the fuze is withdrawn. A separation of 3/64 of an inch between the upper fuze body (11) and the lower fuze body (23) will free the spring loaded firing pin sleeve (20) which will drive the firing pin (28) into the primer detonator (24).

11 SPECIAL PRECAUTIONS:
a. Never attempt to withdraw the fuze during or after installation in the bomb.
b. If bombs with this fuze is not dropped they must be jettisoned over enemy territory or in the sea. They cannot be considered safe even if dropped unarmed.
c. The fuzes should not be subjected exceeding 120°F. In each shipping box there are 2 vials containing powder which solidify at higher temperatures. Follow directions in the shipping box in regard to the use and the disposition of these fuzes if higher temperatures are experienced.
d. In assembling the primer detonator care should be taken to avoid damage to the anti-withdrawal locking ball and its groove.

[redacted] COPY NO.

FUZE DATA FILE NO.

NATIONALITY: U.S. Army		INFORMATION DATE: Sept 1943	
DESIGNATION	PRINCIPAL MARKING	M-123, M-124, M-125	
M-123 M-124 M-125	CLASSIFICATION	Time, Tail fuze.	
	TYPE OF MISSILE	H.E. Bombs	

11 SPECIAL PRECAUTIONS: (CON'T)
e. The adapter booster (the part of the bomb into which the fuze is screwed) should be staked to the tail plug (this plug closes the end of the bomb) and the tail plug should be staked to the bomb case. This operation should be performed before the fuze is installed.

[redacted]

FUZE DATA | FILE NO. | COPY NO.

NATIONALITY: U.S. Army	INFORMATION DATE: Sept. 1943.
DESIGNATION: M 126	PRINCIPAL MARKING: Nose Bomb Fuze M-126
CLASSIFICATION: Mechanical Impact Nose Fuze.	

BOMBS USED IN: M-70 Gas Bomb H.S. loaded only. By removing the adapter ring from the fuze pocket of the M-47A1 gas bomb, this fuze can be used.

DATA	M 126
1. COLOR	Unpainted aluminum
2. OVERALL LENGTH	3.5" (with booster housing)
3. OVERALL WIDTH	1.7" Fuze Body 3.6" Arming Vanes
4. MATERIAL OF CONSTRUCTION	Steel safety blocks, striker, and primer detonator housing; Aluminum body.

5. REMARKS: This fuze is identical with the M-110 series of fuzes in both construction and operation. The only difference is that the booster is eliminated from the M-126. Instead of the booster a steel cylinder, the same dimensions as the booster, is screwed into the base of the fuze body. This steel cylinder contains an elnarged firing train consisting of primer, upper detonator, lower detonator, which is seated against the tetryl burster of the chemical bombs.

NOTE: For description and operation see the M-110.

PART II

SECTION B

NAVY FUZES

FUZE DATA [redacted] COPY NO.
FILE NO. 2111.AN 4

NATIONALITY: U.S. Navy	INFORMATION DATE: Sept. 1943
DESIGNATION: Mk 131 Mk 136	TYPE OF MISSILE: Mk 36 used in hedgehog rockets. Mk 31 used in mousetrap rockets.
CLASSIFICATION: Water Arming, Impact Firing.	PRINCIPAL MARKINGS: USN Mk 31; or USN Mk 36 stamped on fuze shoulder.

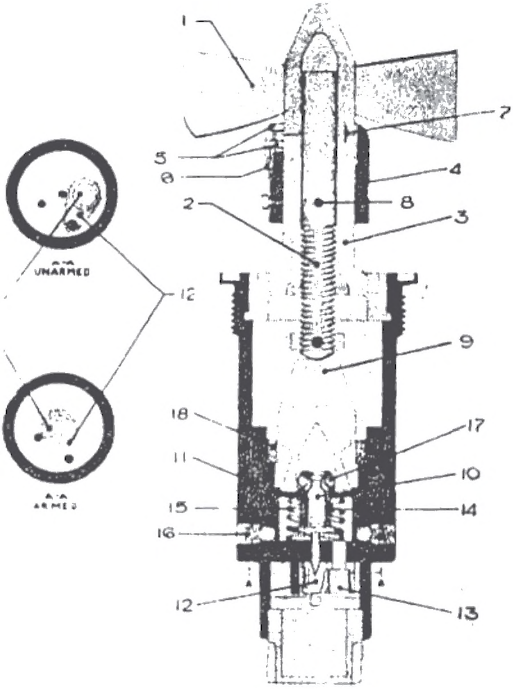

FUZE DATA [redacted] COPY NO. FILE NO. 2111.AN 4

NATIONALITY: U.S. Navy	INFORMATION DATE: Sept. 1943
DESIGNATION: Mk 131 Mk 136	TYPE OF MISSILE: Mk 36 used in hedgehog rockets. Mk 31 used in mousetrap rockets.
CLASSIFICATION: Water Arming, Impact Firing.	PRINCIPAL MARKINGS: USN Mk 31, or USN Mk 36 stamped on fuze shoulder.

BOMBS USED IN: Mk 31-1 in Mk 5 & 7 A.S. Projectile chg. for Mk 20, 21, 22 Projectors. Mk 36 in A.S. Projectiles Mk 10 for Mk 6 & 8 Projector charge.

DATA

1. COLOR	Unpainted Mk 31-1 has red painted on nose of vane hub.	
2. OVERALL LENGTH		7.695" (including booster cup)
3. OVERALL WIDTH	Vanes Body	3.125" 2.25"
4. MATERIAL OF CONSTRUCTION		Steel.

5. PARTS

(1) Arming vanes	(10) Firing pin
(2) Spindle	(11) Firing pin sleeve
(3) Fuze neck	(12) Spring loaded shutter
(4) Setback collar	(13) Detonator
(5) Locking pins	(14) Inner spring
(6) Leaf spring	(15) Outer spring
(7) Vertical shear wire	(16) Spring loaded detents
(8) Safety pin	(17) Retaining balls
(9) Inertia piece	(18) Retaining ring

6. DESCRIPTION The two fuzes are identical except that the Mk 136 has a shear wire through the setback collar. The curved vanes (1) key into a threaded spindle (2) which threads into the neck of the fuze (3). When unarmed, the vanes are held immovable by a setback collar (4) which is slotted to accomodate locking pins (5) in the vane cap and the fuze neck. A leaf spring (6) fits over the collar slots and holds the collar up so the slot will hold the pins. In addition, there is a vertical shear wire (7) from the neck into the vane cap. A safety pin (8) passes through the collar, neck and spindle, the neck is threaded, cemented and staked into the fuze body. The arming spindle (2) in the unarmed position, extends into the upper part of the fuze body, and bears against the top of an inertia piece (9). The firing pin (10) is housed in a firing pin sleeve (11) in the lower part of the fuze body, and in the unarmed position, the sleeve (11) bears against the floor of the fuze body cavity, the firing pin (10) protruding through a guide hole into the shutter cavity, and holding the spring loaded shutter (12) which carries the detonator (13) from springing into position. The firing pin sleeve is a cylindrical cup with a throat at its upper end. The lower portion of the sleeve fits flush against the side of the fuze body. In the space between the firing pin and its sleeve, two compressed springs are housed. One spring (14) bears on the sleeve and thrusts downward against a flange on the firing pin. The outer spring (15) bears on the floor of the fuze body, thrusting upward against the firing pin sleeve. The skirt of the firing pin sleeve holds back four spring loaded detents (16) which are lodged in the side of the fuze body. The upper end of the firing pin

FUZE DATA [redacted] COPY NO. FILE NO. 2111.AN 4

NATIONALITY: U.S. Navy	INFORMATION DATE: Sept 1943
DESIGNATION: Mk 131 Mk 136	TYPE OF MISSILE: Mk 36 used in hedgehog rockets. Mk 35 used in mousetrap rockets.
CLASSIFICATION: Water Arming, Impact Firing.	PRINCIPAL MARKINGS: USN Mk 31, or USN Mk 36 stamped on fuze shoulder.

DESCRIPTION (Cont'd) is grooved. This groove fits opposite three round holes in the firing pin sleeve throat. The throat of the inertia piece is also grooved at the point where it fits down over the throat of the sleeve. The three above mentioned parts are held together by means of retaining balls (17) which fit into the holes in the firing pin sleeve and the grooves of the firing pin and inertia piece. A retaining ring (18) on a shoulder in the fuze body stops the forward motion of the firing mechanism, permitting the fuze to arm.

7. POSITION AND METHOD OF FIXING IN BOMB Screws into fuze adapter in nose of bomb. Five right-hand threads.

8 FUZES LIKELY TO BE FOUND WITH Propelling charge of rocket is ignited by an electric squib primer.

9 COMPONENTS OF EXPLOSIVE TRAIN The lead azide primer detonator is located in a spring loaded shutter. A booster lead in (tetryl) and tetryl booster complete the train.

10. ARMING TIME 6-7 revolutions of vanes in the water. This runs in 10 to 15 feet of water travel.

11. OPERATION The safety pin is removed before loading the rocket on the projector. when the missile is fired, the setback collar moves back (breaking the shear wire of the Mark 136) thus releasing the locking pins from their slot. When the missile strikes the water, the force of the impact upon the vanes causes a torque sufficient to shear the vertical pin holding the throat and vane cap. The vanes are the free to rotate and raise the spindle. As the spindle rises, the spring raises the firing pin sleeve and the inertia piece, allowing the detents to spring out as soon as the carrier skirt rises sufficiently. This movement also raises the firing pin clear of the shutter and allows the shutter over against the stop pin aligning the detonator with the firing pin. The movement of the sleeve is stopped when it comes to bear against the retaining ring in the fuze body. The spindle continues to rise, however, and is raised well clear of the inertia piece. The fuze is now armed. On impact inertia carries the inertia piece forward, thus clearing the (3) retaining balls, thereby allowing the balls to jump out, releasing the cocked firing pin which is forced into the detonatur.

12. REMARKS The detents in the fuze body which spring out under the skirt of the striker carrier are provided in order to allow the spindle to be screwed back down from the armed position without danger of forcing the striker into the detonator. In view of the fact that the inertia piece may be insecurely lodged over the striker spindle, this procedure is not recommended on any rocket which has once been fired.

[redacted] COPY NO

FUZE DATA FILE NO.

NATIONALITY: U.S. Navy	INFORMATION DATE: Sept. 1943
DESIGNATION: MK 137(A.I.R)	TYPE OF MISSILE: Barrage rockets for use aboard small craft.
CLASSIFICATION: Air arming, Impact Firing, Rocket fuze.	PRINCIPAL MARKING: R.F. MK 137
MARKINGS AND SUBSIDIARY MARKINGS	R.F. MK 137 and Lot, Manufacturer, Inspector and date of manufacture.

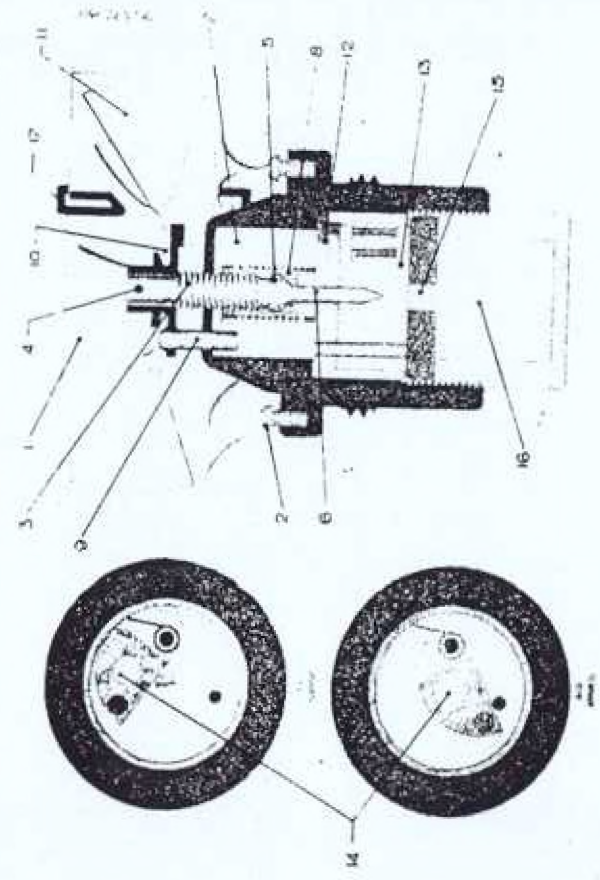

[redacted]

FUZE DATA | COPY NO. | FILE NO.

NATIONALITY: U.S. Navy.	INFORMATIONDATE: Sept. 1943
DESIGNATION: Mk-135 H.I.R.	TYPE OF MISSILE: AS projector
	Mk 20, 21 & 22.
CLASSIFICATION: Hydrostatic arming, impact firing, rocket fuze.	PRINCIPAL MARKING: RF Mk-135

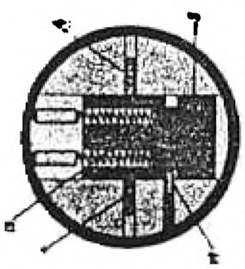

SECTION A-A. ARMED POSITION.

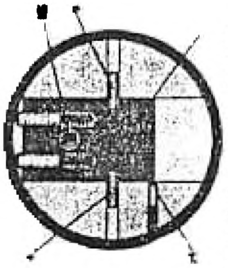

SECTION A-A. UNARMED POSITION.

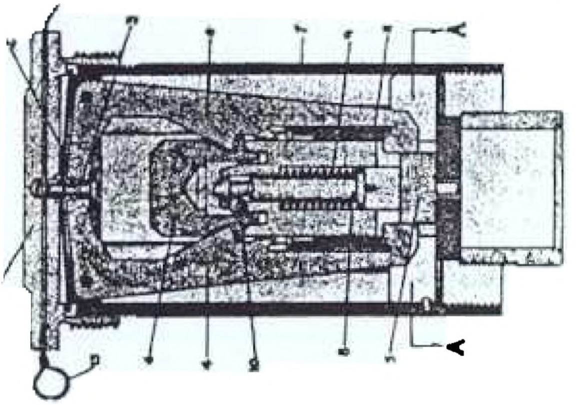

[redacted]

FUZE DATA — FILE NO. — COPY NO.

NATIONALITY: U.S. Navy.	INFORMATION DATE: Sept. 1943
DESIGNATION: Mk-135 H.I.R.	TYPE OF MISSILE: AS projector Mk 20, 21 & 22.
CLASSIFICATION: Hydrostatic arming, impact firing, rocket fuze.	PRINCIPAL MARKING: RF Mk-135
MARKINGS & SUBSIDIARY MARKINGS.	R.F. Mk-135 and lot, manufacturer, inspector, and date of manufacture.

DATA	
1. COLOR	Unpainted brass.
2. OVERALL LENGTH	5 inches.
3. OVERALL WIDTH	3 ½ inches.
4. MATERIAL OF CONSTRUCTION.	Brass.

5. PARTS.

1. Nose cap with 2 water intake ports.
2. Phosphor-bronze diaphragm.
3. Diaphragm button.
4. Bell cranks.
5. Detonator shutter.
6. Weight.
7. Body.
8. Firing pin.
9. Firing pin spring.
10. 3 locking balls.
11. Safety sleeve.
12. Gasket.
13. Safety wire.
14. Springed detent.
15. Detonator.

	A nose cap with two water intake ports (1) is screwed on the upper fuze housing. Phosphor-bronze diaphragm (2) works against diaphragm button (3) and bell cranks(4). In the unarmed position bell cranks (4) engage detonator shutter (5) and maintain body and weight (6) locked together. In this position firing pin (8) is locked with spring (9) compressed by three locking balls (10). Freely moving safety sleeve (11) on set-back and on decelleration in water engages hooks in the bell cranks (4). Gasket (12) provides water tight seal. Safety wire (13) locks diaphragm (2) in unarmed position. Springed detent (14) locks detonator shutter (5) in armed position.
7. POSITION AND METHOD OF FIXING IN BOMB.	Nose - screw in, using spanner wrench check gasket to insure water tightness; remove safety wire from water intake - also check safety sleeve to see that it is freely moving.
8. FUZES LIKELY TO BE FOUND WITH	Used alone - propellant and primer in tail.
9. COMPONENTS OF EXPLOSIVE TRAIN.	Detonator - in shutter. Booster lead-in - in disc. Booster - 30 grams of tetryl in booster cap.

[redacted]

FUZE DATA — FILE NO. — COPY NO.

NATIONALITY: U.S. Navy.	INFORMATION DATE: Sept. 1943
DESIGNATION: Mk-135 H.I.R.	TYPE OF MISSILE: AS projector Mk 20, 21, and 22.

DATA	
10. ARMING TIME.	Arms under static pressure of approximately 30 feet of water - at high velocity with which it strikes the water, dynamic pressure is built up on the head, and it arms at depth of from 15 to 20 feet.
11. OPERATION.	The safety wire (13) is removed; water enters ports of nose cap (1) and pressure acts on the phosphor-bronze diaphragm (2) until it pops at a depth of 15 - 20 feet. This diaphragm action moves two bell cranks (4) out of engagement with the weight (6) and the spring loaded detonator shutter (5) which slides into position being locked there by springed detent (14). The fuze is now fully armed. (A freely moving safety sleeve (11) on set-back, engages bell crank hooks to prevent premature arming; on deceleration in water this sleeve engages the bell cranks (4) to reduce possibility of premature functioning). Upon impact the sudden deceleration pulls the weight (6) forward forcing locking balls (10) inward freeing the weight (6). The balls are forced out by springed firing pin (8) which strikes the detonator (15).
12. REMARKS.	1. In Mods. 1 and 2 the sensitivity is doubled. 2. If the fuze is lowered into the water it will arm at approximately 30 feet but when it is projected it arms at approximately 20 foot depth. 3. Mod 2 has detents which lock bell cranks in armed position.

[redacted] COPY NO.

FUZE DATA FILE NO.

	INFORMATION DATE: SEPT. 1945
DESIGNATION: MK 139	TYPE OF MISSILE: ROCKETS
CLASSIFICATION: SIR (SPRING ARMING, IMPACT FIRING, ROCKET PROJECTED)	BOMBS USED IN: RETRO BOMBS

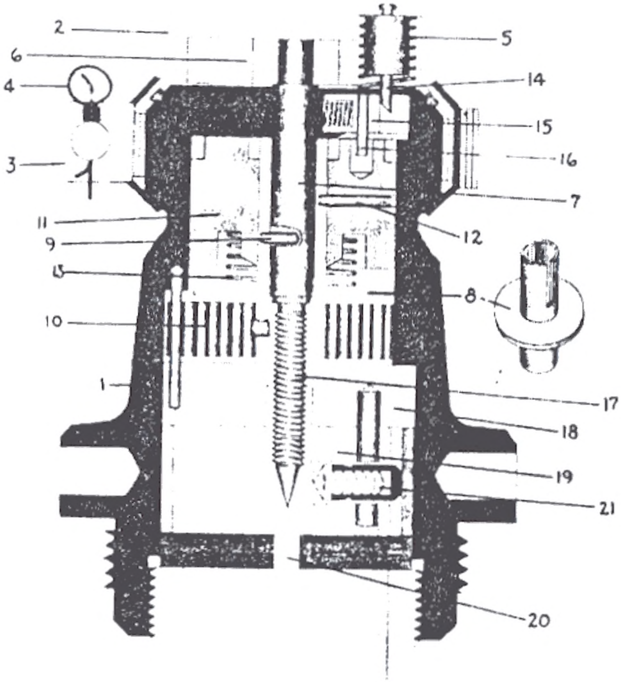

[redacted]

FUZE DATA — **FILE NO.** — **COPY NO.**

NATIONALITY: U.S. Navy.	**INFORMATION DATE:** Sept. 1943
DESIGNATION: Mk-140 H.I.R.	**TYPE OF MISSILE:** A.S. projectors M-10, 20, 21, 22.
CLASSIFICATION: Hydrostatic arming, impact firing, rocket fuze.	**MARKINGS:** R.P. Mk-140. Also Mod and lot number, date of manufacture and the loading activity.

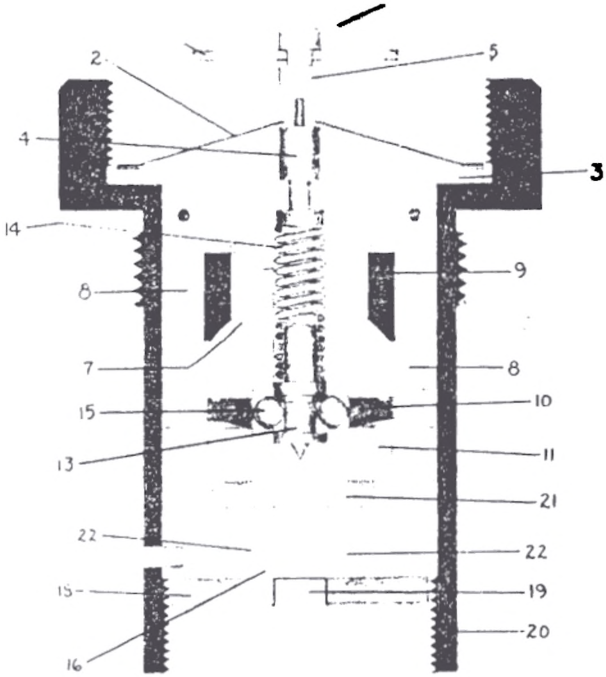

CONFIDENTIAL.

[redacted] COPY NO 8

FUZE DATA FILE NO.

NATIONALITY: U.S. Navy	INFORMATION DATE: Sept. 1943
DESIGNATION: MK 137(A.I.R)	TYPE OF MISSILE: Barrage rockets for use aboard small craft.
CLASSIFICATION: Air arming, Impact Firing, Rocket fuze.	PRINCIPAL MARKING: R.F. MK 137

MARKINGS AND SUBSIDIARY MARKINGS R.F. MK 137 and Lot, Manufacturer, Inspector and date of manufacture.

DATA	
1. COLOR	Body - machine finished brass; vanes and guard, plated steel.
2. OVERALL LENGTH	2.965"
3. OVERALL WIDTH	Body, 1.750"; Vanes guard 2.705"
4. MATERIAL OF CONSTRUCTION	Body and shutter - brass. Other parts - steel.

5. DESCRIPTION The vanes are protected by a guard (1) which is fixed to the nose by screws. (2) The vanes are keyed to the firing pin spindle by a cotter pin (4) the firing pin spindle (3) is threaded thru the center of the fuze head. A flange (5) prevents the firing pin (6) from completely unscrewing. A steel setback collar (7) is placed around the firing pin spindle. The collar is held directly under the fuze head by a setback spring (8). A small pin (9) force fit into the collar protrudes thru the fuze head and into a hole in the vane hub (10), thus locking the vanes (11). The bears against the firing pin guide piece.(12) Below the guide piece is a cavity in which is a spring loaded shutter piece (13) containing the detonator (14). When unarmed the firing pin rests in this cavity and holds back the shutter. Directly beneath the striker and in the floor of the cavity is the booster lead in (15) which connects to the booster cup (16). Prior to loading, the vanes are held immovable by a safety clip wire (17).

6. POSITION AND METHOD OF FIXING IN BOMB Screws into nose of rocket & Right hand threads

7. FUZES LIKELY TO BE FOUND WITH	Used alone. Propellant and primer in tail.

8. COMPONENTS OF EXPLOSIVE TRAIN Detonator consists of three separate pellets, the first, "Azide priming mixture" (containing sulfide potassium chlorate, lead azide and carborundum; second pressed lead azide; and third, pressed tetryl. The booster lead in is tetryl. The booster lead in contains 9 grams of tetryl.

9. ARMING TIME	8 revolutions of arming vanes.

10. OPERATION: Prior to assembling the rocket in the projector the safety clip is removed. When the rocket is fired the force setback causes the setback collar (7) to move down overcoming the setback spring (8) and thus disengaging the vane locking pin (9) from the vane hub (10). The vanes (11) are then free to rotate. After 8 revolutions the firing pin (6) raises far enough so that the shutter (13) can be forced over by its spring to a lead in (16). On impact, the firing pin spindle (3) is driven down shearing the threads of the fuze head, thus causing the firing pin (6) to pierce the detonator (14).

[redacted] COPY NO.

FUZE DATA FILE NO.

NATIONALITY: U.S. NAVY	INFORMATION DATE: SEPT. 1943
DESIGNATION: MK 139	TYPE OF MISSILE: ROCKETS
CLASSIFICATION: SIR (SPRING ARMING, IMPACT FIRING, ROCKET PROJECTED)	BOMBS USED IN: RETRO BOMBS

DATA

1.	COLOR	UNPAINTED
2.	OVERALL LENGTH	4.25 inches
3.	OVERALL WIDTH	2.5 inches
4.	MATERIAL OF CONSTRUCTION	

5. DESCRIPTION: The functioning mechanism is housed in the fuze body (1). A protecting cap (2) is secured to the nose of the fuze by two spring loaded clamps (3), the two clamps being held to gether by a safety pin (4). The protecting cap is held down by the clamps against the compressed cap spring (5). Directly beneath the protecting cap is the firing wheel (6). The firing wheel is attached to the firing pin (7) by a set screw. The firing pin is keyed to the flywheel (8) by a key pin (9). The key pin (9) causes the firing pin to rotate. The flywheel rotates because of the clock spring (10) and the keyway allows the firing pin to rise in the keyway as the flywheel rotates. The setback collar is also keyed to the flywheel by a key pin (12). This key pin (12) rides in another keyway in the flywheel so that the setback collar is free to move down on setback against the setback collar spring (13).

A slide stop pin (14) is riveted to the protecting cap (2). The slide stop pin is resting down alongside a spring loaded slide (15). The spring loaded slide has a stop pin (16) which rests down into a hole in the setback collar, and prevents the rotation of the setback collar, and therefore also of the flywheel.

In the unarmed position, the firing pin is screwed into shear threads (17) in the closure disc (18) and extends into a cavity in the spring loaded detonator shutter (19). This prevents the detonator from being aligned with the booster lead in (20) until the firing pin has withdrawn from the cavity when the fuze becomes armed.

6. POSITION AND METHOD OF FIXING IN ROCKET	The fuze is screwed into the nose of the rocket.
7. FUZES LIKELY TO BE FOUND WITH	The fuze is used alone.
8. COMPONENTS OF EXPLOSIVE TRAIN	Detonator, Booster Lead-in, and Booster.
9. ARMING TIME:	The fuze is armed 0.75 seconds after the rocket is projected.

10. OPERATION: When the fuze is inserted in the projectile an arming wire is inserted and the safety pin (4) is removed.

[redacted] COPY NO.

FUZE DATA FILE NO.

NATIONALITY: U.S. NAVY	INFORMATION DATE: SEPT. 1943
DESIGNATION: MK 139	TYPE OF MISSILE: ROCKETS
CLASSIFICATION: SIR (SPRING ARMING, IMPACT FIRING, ROCKET PROJECTED)	BOMBS USED IN: RETRO BOMBS

10. OPERATION: (CONT'D) As the rocket is projected, the arming wire is withdrawn, the spring loaded clamps (3) fly off, and the protecting cap (2) is thrown off by the compressed spring (5). Simultaneously, setback has caused the setback collar (11) to move down against the setback collar spring (13). The setback collar is then withdrawn from the stop pin (16) on the spring loaded slide (15). Thus, the fly wheel (8) is permitted to rotate by the force of the clock spring (10). As the flywheel rotates the firing pin (4) is caused to rotate, and to rise on the shear threads (17) in the closure disc (18). When the firing pin has risen out of the cavity in the detonator shutter (19), the detonator shutter is forced around by the shutter spring (21) aligning the detonator under the firing pin, and over the booster lead-in (20). The fuze is now fully armed. On impact with water, the fuze will not fire because the firing wheel, shaped in the form of a cross, does not offer enough surface to shear the threads (17) in the closure disc. On impact with a solid object, such as the side of a submarine, the firing pin is forced down, shearing the shear threads, and the firing pin pierces the detonator, sitting off the explosive train.

11. REMARKS

1. Care should be taken in handling the fuze, that the spring loaded clamps are not released.
2. Do not remove the safety pin until the arming wire is secured.

[redacted]

FUZE DATA — COPY NO. — FILE NO.

NATIONALITY: U.S. Navy.	INFORMATION DATE: Sept. 1943
DESIGNATION: Mk-140 H.I.R.	TYPE OF MISSILE: A.S. projectors M-10, 20, 21, 22.
CLASSIFICATION: Hydrostatic arming, impact firing, rocket fuse.	MARKINGS: R.F. Mk-140. Also Mod and lot number, date of manufacture and the loading activity.
DATA	
1. COLOR.	Unpainted brass with steel nose cap.
2. OVERALL LENGTH.	4 1/2 inches.
3. OVERALL WIDTH	2 11/16 inches.
4. MATERIAL OF CONSTRUCTION.	Brass.

5. PARTS.

1. Nose cap with 2 water intake ports.
2. Phosphor-bronze diaphragm
3. Diaphragm seat.
4. Button.
5. Nut.
6. Safety wire.
7. Head.
8. Bell cranks.
9. Safety ring.
10. Firing sleeve.
11. Striker ring.
12. Firing sleeve springs.
13. Firing pin.
14. Firing pin spring.
15. Locking balls.
16. Detonator shutter.
17. Spring detent.
18. Lead-in disc.
19. Booster cap.
20. Case.
21. Fuse body.
22. Shutter springs.

6. DESCRIPTION: Nose cap with two water intake ports (1) is screwed into upper end of case (20). Phosphor-bronze diaphragm (2) is set in upper end of case (20) against diaphragm seat (3). Button (4) in which two bell cranks (8) are engaged is secured by nut (5) in diaphragm (2). Nut (5) strapped to anchor diaphragm (2) to nose cap (1) when safety wire (6) inserted through water intake ports. In unarmed position bell cranks (8) affixed by pins to head (7) engages freely moving safety ring (9) on set-back, firing sleeve (10) which moves down on firing sleeve springs (21) on water impact, and detonator shutter (16). Fuse body (21) houses firing pin (13) and firing pin spring (14) and locking balls (15). Striker ring (11) and firing sleeve (10) which holds locking balls (15) in place are set around fuse body (21). Detonator shutter (16) under spring (22) pressure is fitted in a grooved fuse body (21) and has a spring detent (17). Lead-in disc (18) is housed between shutter (16) and booster cap (19).

[redacted]

FUZE DATA — COPY NO. — FILE NO.

NATIONALITY: U.S. Navy.	INFORMATION DATE: Sept. 1943
DESIGNATION: Mk-140 H.I.R.	TYPE OF MISSILE: A.S. projectors M-10, 20, 21, 22.
7. POSITION AND METHOD OF FIXING IN BOMB.	Nose check freedom of movement of safety ring - use spanner wrench check gasket to insure water tightness, remove safety wire.
8. FUZES LIKELY TO BE FOUND WITH.	Used alone - propellant and primer in tail.
9. COMPONENTS OF EXPLOSIVE TRAIN.	Detonator - in shutter. Booster lead-in - in disc. Booster - 30 grams tetryl in booster cap.
10. ARMING TIME:	Arms under static pressure of approximately 30 feet of water - at high velocity with which projectile strikes the water dynamic pressure is built up on the head and it arms at depths from 8 to 15 feet.
11. OPERATION.	Safety wire (6) is removed, water enters ports of nose cap (1) and pressure acts on phosphor-bronze diaphragm (2) until it pops (between 8 and 15 feet of water) moving two bell cranks (8) out of engagement with shutter (16) and firing sleeve (10) thus arming the fuse. Shutter (16) under spring (22) pressure moves into position and is locked then by detent (17). To prevent premature arming, on setback, safety ring (9) is held in engagement with hooks on bell cranks (8) and on water impact firing sleeve (10) moves down on firing sleeve springs (12) and momentarily engages hooks on bell cranks. On impact with solid object inertia forces striker ring (11) and firing sleeve (10) forward on firing sleeve springs (12) thus releasing locking balls (15) which are ejected by force of firing pin (13) under spring (14) pressure. A glancing blow causes loosely fitting striker ring (11) to move sideways camming firing sleeve (10) forward. Firing pin (13) is forced onto detonator by force of firing pin spring (14).
12. REMARKS.	Sideways sensitivity 1/6 to 1/4 of nose sensitivity.

3638

FUZE DATA [redacted]	COPY NO. FILE NO. 2111.AN2
NATIONALITY: U.S. Navy	INFORMATION DATE: Sept 1943
DESIGNATION: Mk 219, Mods. 2,3,4 AN-Mk 219	TYPE OF MISSILE: H.E., Depth or Gas Bomb.
CLASSIFICATION: Mechanical Impact Nose Fuze.	BOMBS USED IN: (See remarks)

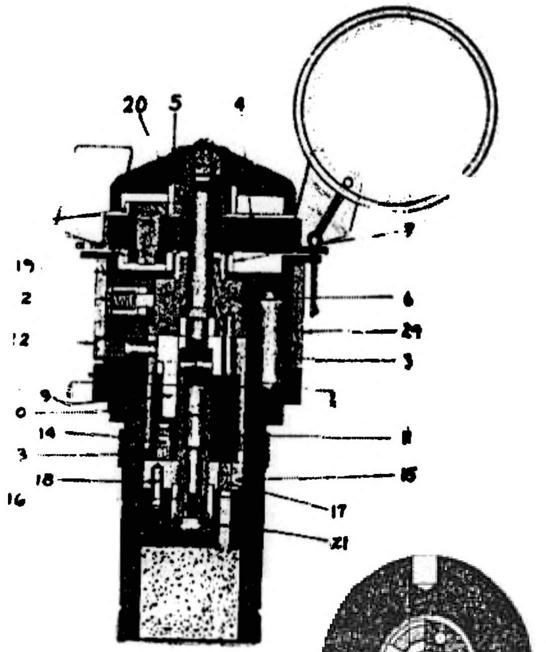

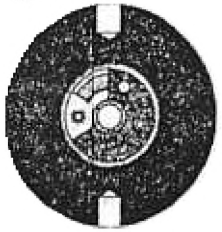

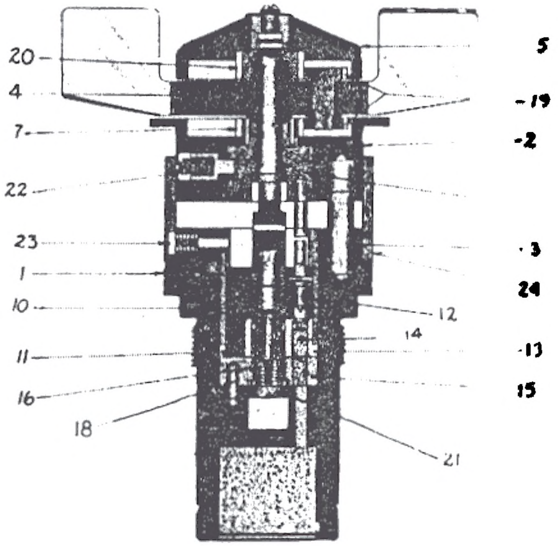

FILE NO.

NATIONALITY: U.S. Navy   INFORMATION DATE: Sept. 1943

DESIGNATION: Fuze extension for Mk 219 Fuze "Daisy Cutter".

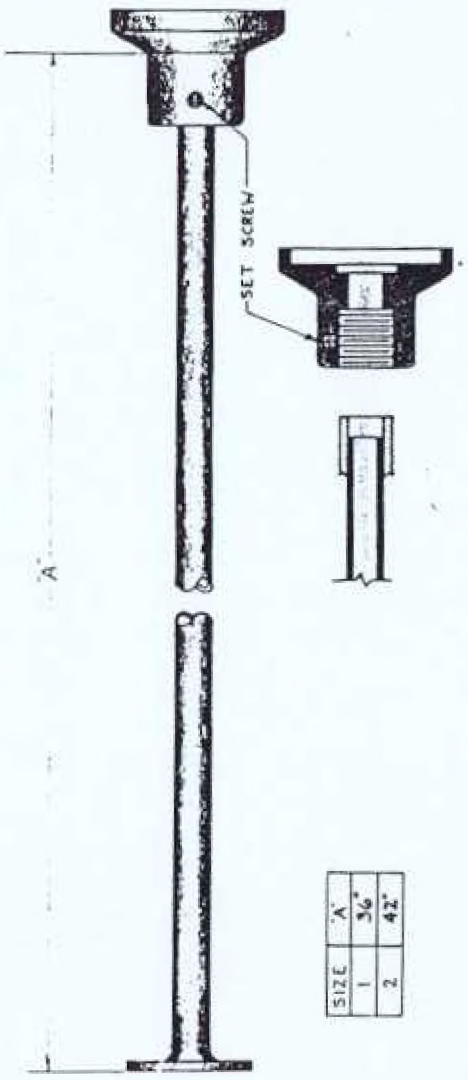

SIZE	"A"
1	36"
2	42"

FUZE DATA [redacted] COPY NO.
FILE NO. 2111.AN2

NATIONALITY: U.S. Navy	INFORMATION DATE: Sept 1943
DESIGNATION: Mk 219, Mods. 2,3,4 AN-Mk 219	TYPE OF MISSILE: H.E., Depth or Gas Bomb.
CLASSIFICATION: Mechanical Impact Nose Fuze.	BOMBS USED IN: (See remarks)

DATA	Mark 219 and Mark AN-219
1. COLOR	Unpainted steel or aluminum
2. OVERALL LENGTH	5.5 inches (with booster)
3. OVERALL WIDTH	2.75 inches
4. DIAMETER OF VANES	4.75 inches (Four vanes)
5. MATERIAL OF CONSTRUCTION	Steel, aluminum alloy and brass.

6. DESCRIPTION: The fuze consists of a steel body (1) with three projecting pins (3) on the upper end which fit into the striker (2) and prevent the striker from rotating. The striker is held in position by the vane carrier (4) and by the head (5). Four vanes are attached to the vane carrier by screws.

The arming mechanism consists of the lower gear carrier (6) fitted into the striker (2). On the upper end of the lower gear carrier is the lower gear (7) containing 22 teeth while on the lower end of the lower gear carrier is the firing pin extension (8) and the firing pin holder lug (9) which fits into a slot on the inner sleeve and also engages with the movable firing pin holder (11).

The firing pin holder, which houses the firing pin (12) engages the rotor (13) which houses the detonator (14); the purpose of the rotor being to separate the explosive train when the fuze is in an unarmed position. This rotor fits into a slot at the lower end of the inner sleeve (10) which limits the length of rotation to 180 degrees. The inner sleeve is prevented from rotating by a projection on the lower end which fits into a groove of the shaft extension nut (15). The shaft extension nut which screws into the bottom of the spindle (16) contains an auxiliary booster lead in (17) and is prevented from rotating by a positioning pin (18) on the bottom which fits into a recess in the fuze body.

The reduction gear assembly consists of two pinion gears (19) on the vane carrier, each gear containing 16 teeth. The pinion gear on top of the vane carrier engages the upper gear (20) containing 23 teeth, which is attached to the spindle (16) and screws the spindle upward on the threads through the shaft extension nut (15). The upward movement of the spindle is stopped when a screw (21) which is threaded into the bottom of the spindle, joins with the shaft extension nut. When the upward movement of the spindle stops, the pinion gear on the bottom of the vane carrier transmits the motion to the lower gear (7) and rotates the lower gear carrier (6). When the rotation inside is complete with firing pin (12) and explosive train lined up, the spring loaded detent (22) and locking screw (23) are the means by which the arming and firing assembly is attached to the fuze body.

7. POSITION AND METHOD OF FIXING IN BOMB	Fuze is screwed into the nose of the bomb.

FUZE DATA [redacted] COPY NO.
FILE NO. 2111.AN2

NATIONALITY: U.S. Navy	INFORMATION DATE: Sept 1943
DESIGNATION: Mk 219, Mods. 2,3,4 AN-Mk 219	TYPE OF MISSILE: H.E., Depth, or Gas Bomb.
CLASSIFICATION: Mechanical Impact Nose Fuze.	BOMBS USED IN: (See Remarks)

8. FUZES LIKELY TO BE FOUND WITH	Mk 223 in H.E. Bombs, or with Mk 224, Mk 234 or Mk 229 in depth bombs.
9. ARMING TIME	4 to 6.25 seconds after release.

10. COMPONENTS OF EXPLOSIVE TRAIN

(a) Detonator	33 grams fulminate of Mercury
(b) Auxiliary booster lead in	.11 grams of tetryl
(c) Closing cup charge	0.2 grams of tetryl
(d) Booster	25.5 grams of tetryl

11. OPERATION When the bomb is released, the arming wire is withdrawn allowing the arming vanes to rotate and thereby drive the reduction gear. As the pinion gears (19) mesh with the upper gear (20) the spindle (16) is rotated and screwed upward through the shaft extension nut (15), however, the lower gear (6) cannot rotate as the firing pin holder lug (9) on the lower end is engaged in the slot of the inner sleeve (10). As the spindle (15) moves upward, it forces the lower gear carrier (6) along with the striker (2), and the arming vane assembly upward until the screw (20) on the lower end of the spindle (15) rests against the shoulder of the shaft extension nut (15). At about this instant the firing pin holder lug (9) on the lower gear carrier (6) closes the slot in the inner sleeve (10). Thus the motion of the pinion gear (19) is transferred to the lower gear (7) causing the lower gear carrier (6) to rotate. As the lower gear carrier rotates through approximately 60 degrees, the firing pin holder lug (9) engages the firing pin holder (11) which then rotates with the lower gear carrier. As these parts rotate through another 120 degrees, the firing pin extension (8) and the firing pin (12) are aligned with the detonator (14) in the rotor (13) and the firing pin holder (11) engages with the rotor causing it to rotate. The entire assembly rotates through 180 degrees until the firing assembly and detonator are aligned with the auxiliary booster lead in (17), the shaft extension nut (15) hits against the wall of the inner sleeve (10) preventing further rotation, and the spring loaded detent (22) engages in a hole of the lower gear carrier (6) to secure the parts in this position. In this position, the fuze is fully armed and the vanes will cease to rotate unless subjected to a wind speed of 300 m.p.h. or greater, in which case the vanes will continue to rotate and shear the wires securing the lower gear to the lower gear carrier. On impact, the upper assembly is forced down, causing the spindle to telescope. This telescoping allows the firing pin extension (8) to force the firing pin (12) into the detonator, thereby setting the explosive train into operation.

12. REMARKS: The Mk 219 will screw directly into the Navy 100 lb. Bomb. However when used with the depth bombs or the Mk 12 500 lb. or Mk 13 1000 lb. bomb, the Mk 19 adapter must be used with an additional auxiliary booster.

To use in AN bombs or Army bombs, it is necessary to use a special auxiliary booster and the Mk 19 adapter. The ordinary Navy auxiliary booster will not fit the Army and AN bombs. The Mk 219 is only used in Army & AN bombs for the use of the daisy cutter. The AN-M 103 is more desirable.

FUZE DATA [redacted] FILE NO. COPY NO.

NATIONALITY: U.S. Navy	INFORMATION DATE: Sept.1943
DESIGNATION: Mk 223	TYPE OF MISSILE: H.E. Bombs
CLASSIFICATION: Mechanical Tail Impact Fuze with short delay.	BOMBS USED IN: 500 lb. and 1000 lb. G.P. Bombs.

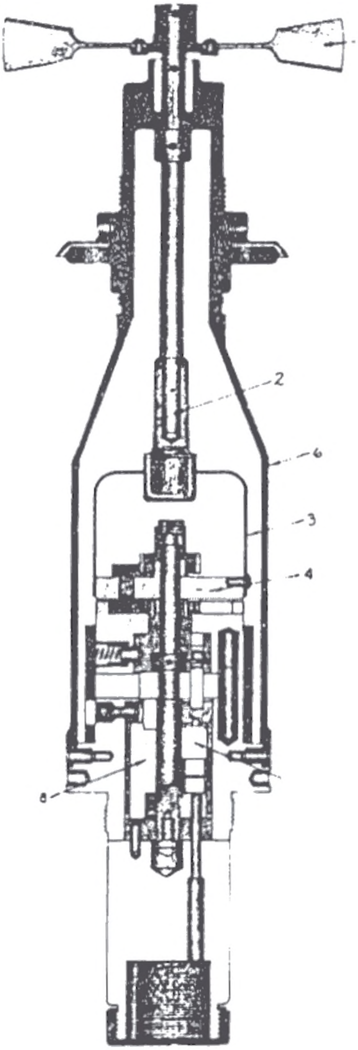

FILE NO.

NATIONALITY: U.S. Navy INFORMATION DATE: Sept. 1943

DESIGNATION: Fuze extension for Mk 219 Fuze "Daisy Cutter".

The fuze extension or"Daisy Cutter" for the Mk 219 instantaneous fuze is shown on the opposite page. The reason for using the daisy cutter is that it is believed that by using the extension, the impact on the fuze will result while the bomb is above the surface of the ground and cause the bomb to detonate before penetration into the earth. If this action results there would be greater fragmentation and blast.

Originally the daisy cutter was rigged up by fixing the extension rod to the Mk 219 fuze cap with screws. These were made in the field. The illustration on the opposite page shows the daisy cutter as made by the specifications of the Bureau of Ordnance.

The daisy cutter fuze cap comes attached to the rod as illustrated. In assembling the rod, the cap is removed from the Mk 219 fuze and discarded. The daisy cutter fuze cap is then removed from the extension rod and put on the fuze and secured there by a screw. The rod is then screwed down into the fuze cap and secured by a set screw.

These extension rods come in two lengths - 42 inches and 30 inches.

The daisy cutter has been used extensively in the South Pacific warfare.

FUZE DATA [redacted] COPY NO
FILE NO.

NATIONALITY: U.S. Navy	INFORMATION DATE: Sept. 1943
DESIGNATION: Mk 221	TYPE OF MISSILE: H.E. Bomb
CLASSIFICATION: Mechanical Nose Impact Fuze with Short Delay.	BOMBS USED IN: 500 lb. and 1000 lb. G.P.
DATA	
1. COLOR	Unpainted steel or aluminum
2. OVERALL LENGTH	8.5" (with booster)
3. OVERALL WIDTH	2.75"
4. DIAMETER OF VANES	5.3" (four vanes)
5. MATERIAL OF CONSTRUCTION	Steel, aluminum alloy, and brass.

6. DESCRIPTION The Mk 221 is essentially the same as the Mk 219 but it incorporates the following differences:

(1) The body is longer and larger.
(2) It incorporates a delay of .01. The delay element and percussion type firing pin are housed in the delay carrier. The delay carrier corresponds to the firing pin carrier in the Mk 219.
(3) A protecting cap is over the head. The vanes are screwed to the vane carrier by four screws which pass through the protecting cap to the vane carrier.
(4) There are three lock screws instead of one.
(5) When the fuze is completely armed a lock pin in the delay carrier falls through an opening in the shaft extension nut into a corresponding opening in the floor of the fuze body locking the parts in place.
(6) The central spindle has a shear collar and a guide pin which permit the central spindle to telescope.

7. POSITION AND METHOD OF FIXING IN BOMB	Fuze is screwed into the nose of the bomb.
8. FUZES LIKELY TO BE FOUND WITH	Mk 223
9. ARMING TIME	850 to 1100 ft. of air travel
10. COMPONENTS OF EXPLOSIVE TRAIN	(a) Delay element consists of a primer, delay pellet of black powder and a special detonator of .07 grams of Fulminate of Mercury. (b) Detonator: .33 grams of Fulminate of Mercury and .55 grams of Pom Pom Mixture No. 74. (c) Auxiliary booster lead in: 11 grams of tetryl. (d) Booster lead in: 2.7 grams of tetryl. (e) Booster: 38.2 grams of tetryl.
11. OPERATION	Operation of the Mk 221 is similar to that of the Mk 219. Reference is made to the Mk 219 for details of operation.

[redacted]

FUZE DATA | FILE NO. | COPY NO. 2338

NATIONALITY: U.S. Navy	INFORMATION DATE: Sept.1943
DESIGNATION: Mk 221	TYPE OF MISSILE: H.E. Bomb
CLASSIFICATION: Mechanical Nose Impact Fuze with Short Delay.	BOMBS USED IN: 500 lb. and 1000 lb. G.P.

DATA

12. REMARKS:	(1)	The Mk 221 will fit in the nose of the depth bomb, but the 0.01 second delay may allow the case of the bomb to be so damaged that a low order detonation may result. Therefore it is not recommended that the Mk 221 be used with the depth bomb.

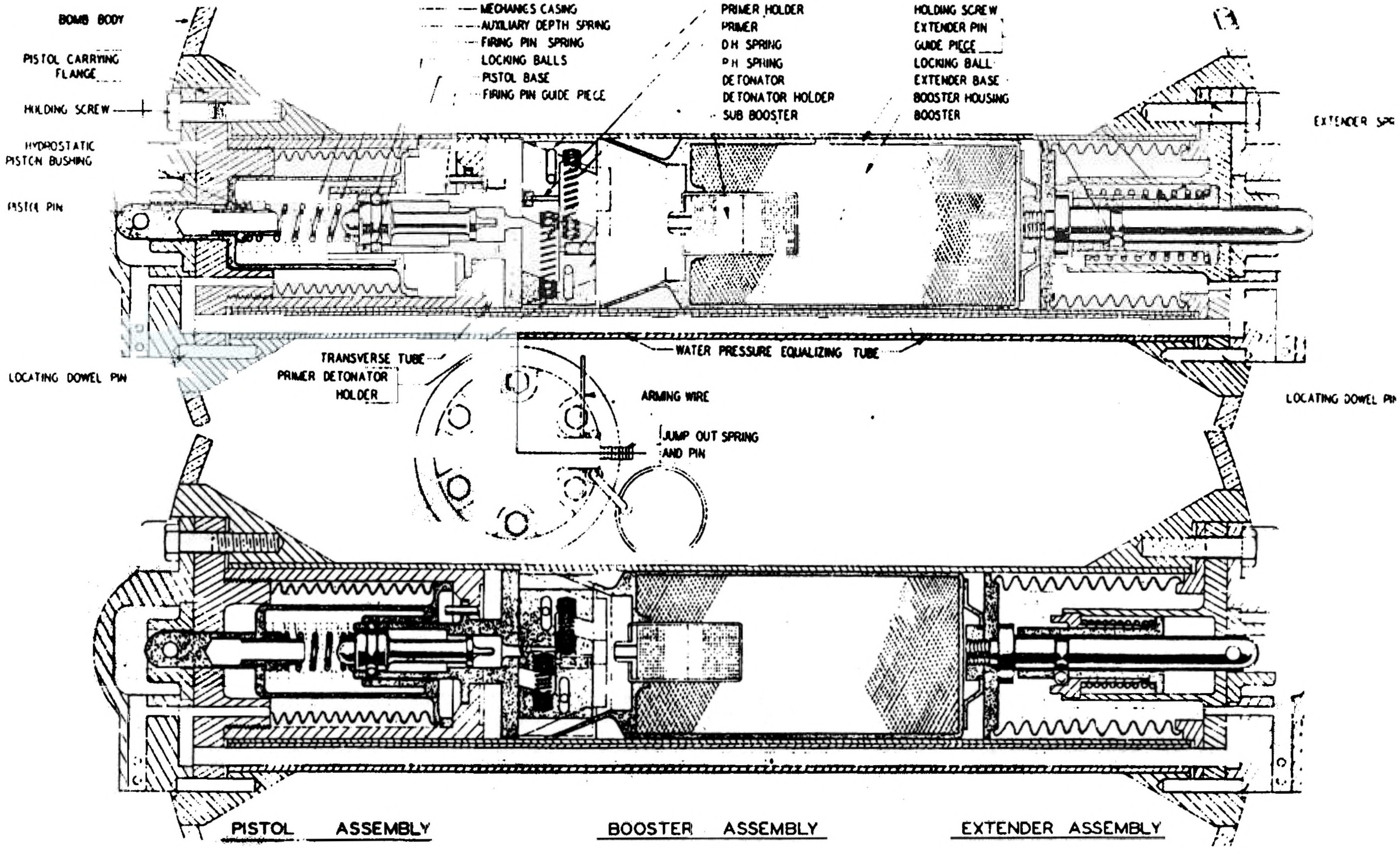
BOMB BODY
PISTOL CARRYING FLANGE
HOLDING SCREW
HYDROSTATIC PISTON BUSHING
PISTOL PIN
MECHANICS CASING
AUXILIARY DEPTH SPRING
FIRING PIN SPRING
LOCKING BALLS
PISTOL BASE
FIRING PIN GUIDE PIECE
PRIMER HOLDER
PRIMER
D H SPRING
P H SPRING
DETONATOR
DETONATOR HOLDER
SUB BOOSTER
HOLDING SCREW
EXTENDER PIN
GUIDE PIECE
LOCKING BALL
EXTENDER BASE
BOOSTER HOUSING
BOOSTER
EXTENDER SP
TRANSVERSE TUBE
WATER PRESSURE EQUALIZING TUBE
LOCATING DOWEL PIN
PRIMER DETONATOR HOLDER
ARMING WIRE
JUMP OUT SPRING AND PIN
LOCATING DOWEL PIN
PISTOL ASSEMBLY
BOOSTER ASSEMBLY
EXTENDER ASSEMBLY

FUZE DATA [redacted] FILE NO. COPY NO. 2638

NATIONALITY: U.S. Navy	INFORMATION DATE: Sept.1943
DESIGNATION: Mk 223	**TYPE OF MISSILE: H.E. Bombs**
CLASSIFICATION: Mechanical Tail Impact Fuze with short delay.	**BOMBS USED IN: 500 lb. and 1000 lb. G.P. Bombs.**

DATA

1. COLOR	Unpainted steel or aluminum alloy.
2. OVERALL LENGTH	16.36" (with booster)
3. OVERALL WIDTH	3.25"
4. DIAMETER OF VANES	5.25" (16 vanes)
5. MATERIAL OF CONSTRUCTION	Steel and aluminum

6. DESCRIPTION The body and rotary assembly are similar to the Mk 219 and to the Mk 221. This fuze differs from the latter two fuzes in that the 16 arming vanes (1) are attached to the vane shaft (2), the lower end of the shaft having a flattened surface to fit into a slot in the top of the cap (3). This cap is attached by screws (4) to the pinion carrier (5). This fuze also has an additional protecting cover (6) which supports the vane shaft (2) and arming vane assembly. The fuze has a delay element (7) in the delay carrier (8) similar to the Mk 221 and functions with 0.01 second delay. There is a window in the protecting cover (6) to show whether the fuze is armed or not. For further details, reference is made to the description of the Mk 219 and Mk 221.

7. POSITION AND METHOD OF FIXING IN BOMB — The fuze is screwed into the base plate of the bomb body.

8. FUZES LIKELY TO BE FOUND WITH Mk 219 or Mk 221 nose fuzes.

9. COMPONENTS OF EXPLOSIVE TRAIN

(a) Delay element consists of a primer, a delay pellet of .025 grams of meal "D" black powder, and a special detonator of .074 grams of Fulminate of Mercury.

(b) Detonator: 33 grams of Fulminate of Mercury and .035 grams of Pom Pom Mixture No. 74.

(c) Auxiliary booster lead in: 11 grams of tetryl.

(d) Booster lead in: 2.5 grams of tetryl (a booster separator lead in consists of .22 grams of tetryl).

(e) Booster: 38.2 grams of tetryl.

10. ARMING TIME 850 to 1100 feet of air travel

11. OPERATION: When the arming wire is withdrawn, the arming vanes (1) and the vane shaft (2) rotate. The lower end of the vane shaft engages the cap (3) which rotates and operates the reduction gearing. The alignment of the firing pin extension, delay firing pin and powder train is similar to the Mk 219 and Mk 221 to which reference is made for further details of operation.

FUZE DATA

NATIONALITY: U.S. Navy	**INFORMATION DATE: Sept. 1943**
DESIGNATION: Mk 223	**TYPE OF MISSILE: H.E. Bombs**
CLASSIFICATION: Mechanical Tail Impact Fuze with short Delay.	**BOMBS USED IN: 500 lb. and 1000 lb. G.P. Bombs.**

12. REMARKS:

(1) The central spindle in this fuze does not telescope, but the collar on the central spindle is sheared on impact due to the force of inertia.

(2) The fuze is fully armed when the striker is raised 5/16 inch as seen through the window in the protecting cap.

[redacted]

COPY NO.

FUZE DATA | FILE NO. S111.AN 3

NATIONALITY: U.S. Navy.	INFORMATION DATE: Sept. 1943
DESIGNATION: Mk. 227	TYPE OF MISSILE: A.A. bombs.
CLASSIFICATION: Mech. impact, nose fuze.	PRINCIPAL MARKING: ---

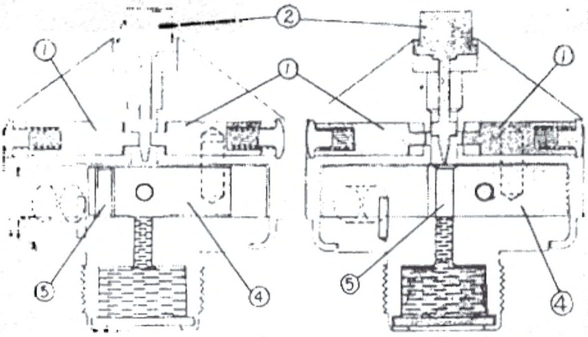

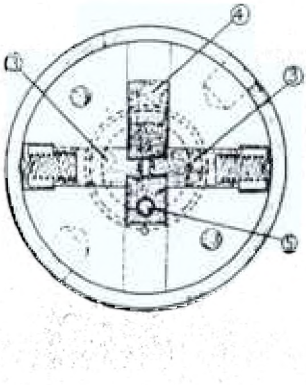

FUZE DATA [redacted] COPY NO.

FILE NO.: 211F.A2

NATIONALITY: U.S. Army-Navy		INFORMATION DATE: Sept. 1943
DESIGNATION	PRINCIPAL MARKING	BOMB FUZE Mk. 24
AN-Mk. 224 Mk. 24	CLASSIFICATION	Mechanical Hydrostatic Fuse
	TYPE OF MISSILE	Depth bombs
		BOMBS USED IN: 325 lb. and 650 lb. Depth bomb.

FUZE DATA [redacted] COPY NO.

FILE NO.: 211F.A2

NATIONALITY: U.S. Army-Navy		INFORMATION DATE: Sept. 1943
DESIGNATION	PRINCIPAL MARKING	BOMB FUZE Mk. 24
AN-Mk. 224 Mk. 24 Mod 1	CLASSIFICATION	Mechanical Hydrostatic Fuse
	TYPE OF MISSILE	Depth bombs
MARKINGS: Stamped on shoulder of both the extender and the pistol:- "BOMB FUZE Mk. 24-1 Lot 10-A L.J.K. Y.S. & L. Co. 1942"		BOMBS USED IN: 325 lb. and 650 lb. Depth bomb.

	DATA	AN-Mk .224 and Mk. 24 Mod. 1
1	COLOR	Unpainted.
2	OVERALL LENGTH	Striker assembly 6.9 inches Booster extension assembly - 9.9 inches
3	OVERALL WIDTH	3.6 inches
4	MATERIAL OF CONSTRUCTION	Bronze, brass, steel and aluminum.

5 DESCRIPTION

This fuse consists of two parts: A pistol and a booster extender. The booster extender, which is fitted into one end of the transverse tube of the depth bomb, consists of the lower body inside which is housed the extender spring and extender pin, and over which is fitted a top cap. This cap holds the lower body in position and has holes through which water may enter to actuate the bellows which are fitted around the outside of the lower body. Extender base, attached to the lower end of extender pin supports the bellows and prevents them from moving downward as long as spring-loaded safety pin engages in a groove at the upper end of the extender pin. The locking ball engages in a groove of the extender pin and locks this to a guide piece so that when bellows are extended, the guide piece is also moved downward with the extender pin to compress the spring. The booster container, which contains the sub-booster and booster charges, hooks on to a nut on the lower end of the extender pin. The lower end of this container is funnel shaped to slide over the lower end of the pistol and align the primer with the detonator when fuse is armed.

The pistol which fits into the other end of the transverse tube consists of an upper plate which supports the pistol pin, the plate being held in position by a cap fitting over the top. There are holes in this cap for water to enter and actuate the bellows which are fitted around the lower part of the pistol pin. However the bellows and pistol pin are prevented from moving downward while in a safety position by a spring-loaded pin which passes through this top cap and engages a groove in the upper end of the pistol pin. Inside the pistol pin are housed the firing pin guide and the firing pin which are locked together by locking balls. Also fitted in this pistol pin are the firing pin spring and the auxillary depth spring which are compressed as the water enters to extend the bellows and move the pistol pin downward. In as much as the water pressure must overcome the tension of these springs before the bellows are extended, the depth at which the assembly will operate may be regulated by leaving out or inserting auxillary depth springs of varying tensions to correspond with the water pressure at the desired depth of operation.

At the lower end of the pistol are two "L" shaped pieces, one containing the primer and the other the detonator. Two springs hold these apart while in the unarmed position and thus break the powder train.

6	POSITION AND METHOD OF FIXING IN BOMB	The pistol and extender assembly are each placed on opposite ends of a transverse tube of the depth charge. Each unit is secured in place by six bolts screwing into body of the bomb.
7	FUZES LIKELY TO BE FOUND WITH	May be found with Mk. XIX or Mk. XXI and Mk. 29.

	DATA	AN-Mk. 224 and Mk. 24 Mod. 1
8	ARMING TIME	It arms immediately on withdrawal of two arming wires.
9	COMPONENTS OF EXPLOSIVE TRAIN	Primer and detonator. The booster consists of a sub booster and the main charge.
10	OPERATION	The arming wires are withdrawn when the depth bomb is released. As the bomb sinks, the water exerts equal pressure on both units of the fuse to extend the bellows. When the water pressure is greater than the tension of the spring in the extender assembly, the bellows are expanded causing the extension pin, guide piece and the booster assembly to move inward until the locking balls fall into a recess of a sleeve. This unlocks the extender pin and allows the water pressure to force the booster assembly in further until the funnel end slides over the lower end of the pistol. The guide piece is simultaneously locked in this position to prevent the booster assembly from moving outward again. The forward movement of the funnel compresses the springs which maintain the L-shaped primer and detonator housings apart, thus aligning the primer, detonator and sub-booster with the firing pin. As the water pressure increases and overcomes the tension of the firing and auxiliary depth springs in the pistol, the bellows extend and the pistol base moves down over the firing pin guide piece. At the same time the firing and auxiliary depth springs are compressed until the pistol locking balls are forced out behind the pistol base. The firing pin is then driven forward by the springs and impacts the primer, thereby setting the explosive train into operation.
11	REMARKS	1. This fuse may be assembled to give any of the depth settings listed below and will be correspondingly marked:- 25 feet --- yellow 50 feet --- black 75 feet --- black, green 100 feet --- yellow, red 125 feet --- black, red

[redacted]

FUZE DATA

COPY NO.
FILE NO. 2111 AN 3

NATIONALITY: U.S. Navy.	INFORMATION DATE: Sept. 1943
DESIGNATION: Mk. 227	TYPE OF MISSILE: A.A. bombs.
CLASSIFICATION: Mech. impact, nose fuze.	PRINCIPAL MARKING: ---

DATA	
1. COLOR	Unpainted.
2. OVERALL LENGTH	2.35 " (with booster)
3. OVERALL WIDTH	2.0 "
4. MATERIAL OF CONSTRUCTION.	Some parts are of brass and copper which are tin plated.
5. PARTS.	1. Firing pin detents. 2. Firing pin. 3. Slider detents. 4. Slider. 5. Detonator. 6. Aluminum discs.
6. DESCRIPTION.	The fuze consists of a body in which are fitted four spring loaded detents, two of which (1) prevent the firing pin (2) from housing downward while the fuze is unarmed. The two detents (3) engage the slider (4) which contains the detonator (5) and keeps the detonator (5) out of line with the firing pin (2) until the fuze is armed. A thin sheet aluminum disc (6) rests between the slider (4) and the firing pin (2) and prevents premature firing until contact with an object such as the surface of an airplane wing or fuselage.
7. POSITION & METHOD OF FIXING IN BOMB.	Fuze is screwed into the nose of the bomb.
8. FUZES LIKELY TO BE FOUND WITH	Fuze will be found alone.
9. COMPONENTS OF EXPLOSIVE TRAIN	Detonator consists of .23 grams of Fulminate of Mercury. Booster lead-in consists of .1 gram of Tetryl. Booster consists of 3.05 grams of Tetryl.
10. ARMING TIME	The fuze arms when bomb is rotating 1500 rpm. or after bomb has dropped approximately 1100 feet.
11. OPERATION.	Upon release from the container, the bomb begins to rotate due to the angular setting of the vanes. When rotation reaches a velocity of 1500 rpm., the firing pin detents (1) and the slider detents (3) are thrown outward due to centrifugal force. This frees the firing pin (2) which moves down onto the aluminum disc (6). And the slider (4)

[redacted]

FUZE DATA

COPY NO.
FILE NO. 2111 AN 3

NATIONALITY: U.S. Navy.	INFORMATION DATE: Sept. 1943
DESIGNATION: Mk. 227	TYPE OF MISSILE: A.A. bombs.
CLASSIFICATION: Mech. impact, nose fuze.	PRINCIPAL MARKING: ----

DATA	
11. OPERATION (cont'd)	which moves outward until stopped by the fuze body. This movement of the slider (4) over until the detonator (5) is in line with the firing pin (2) comes in contact with any object such as the surface of an airplane wing or fuselage. The firing pin (2) punctures the aluminum disc (6) and fires the detonator.
12. REMARKS:	(a) In the unarmed position, the firing pin projects outward .215 ".

13. BOMBS USED IN: Mk 32 and Mk 34 A.A. Bombs

FUZE DATA [redacted]

COPY NO.
FILE NO. 2111 ATJ

NATIONALITY: U.S. Navy	INFORMATION DATE: Sept. 1943
DESIGNATION: Mk 228 and MN-Mk 228	TYPE OF MISSILE: H.E. Bombs
CLASSIFICATION: Mechanical Impact Tail Fuze with short delay.	BOMBS USED IN: 1000 lb. and 1600 lb. A.P.

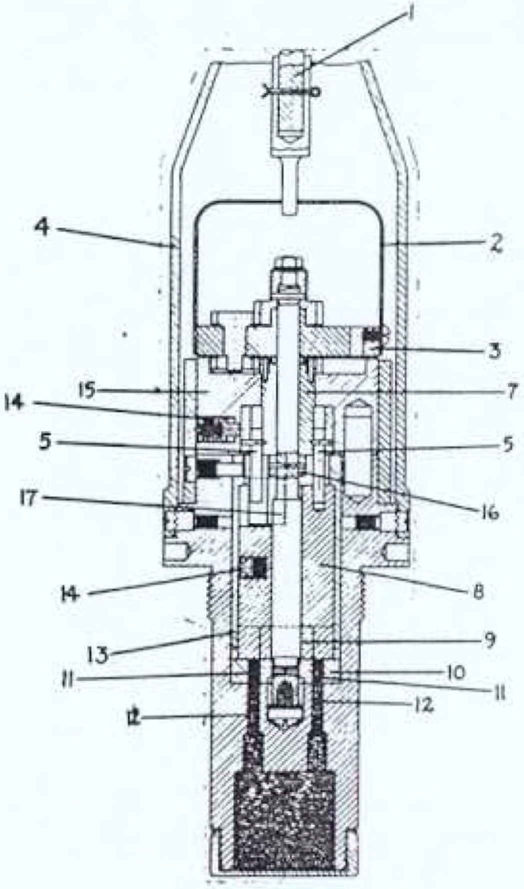

FUZE DATA

COPY NO.
FILE NO. 2118.AT1

NATIONALITY: U.S. Army, Navy.	INFORMATION DATE: Sept. 1943
DESIGNATION: AN-Mk-230 USN-Mk-229	TYPE OF MISSILE: Aircraft Depth bombs.
CLASSIFICATION: Mech. arming hydrostatic firing, tail fuze.	BOMBS USED IN: AN-Mk-230 in AN-M-64, 65 & 66 G.P. bombs. USN-Mk-229 in 650 lb. depth bombs.

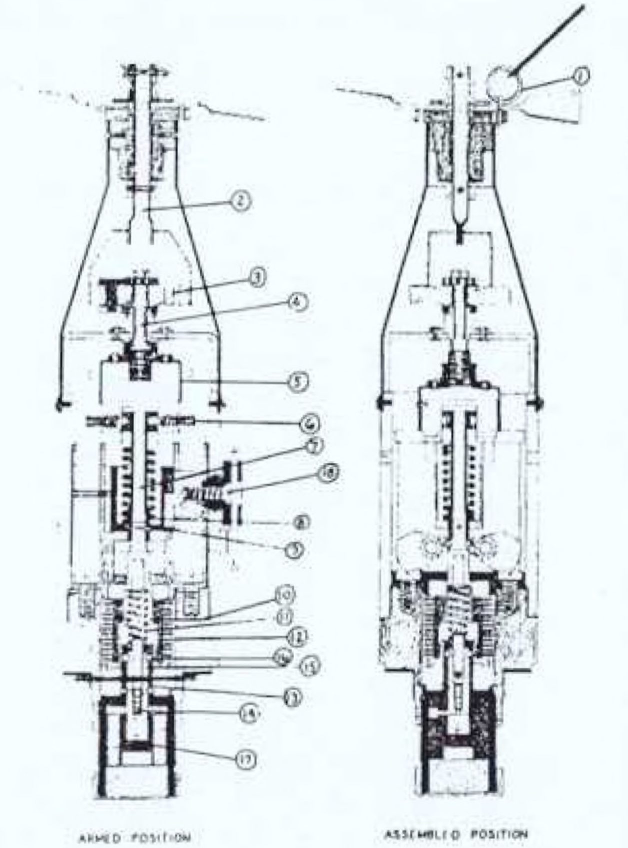

FUZE DATA [redacted] COPY NO. FILE NO. 2111 AT3

NATIONALITY: U.S. Navy	INFORMATION DATE: Sept. 1943
DESIGNATION: Mk 228 and AN-Mk 228	TYPE OF MISSILE: H.E. Bombs
CLASSIFICATION: Mechanical Impact Tail Fuze with short delay.	BOMBS USED IN: 1000 lb. and 1600 lb. A.P.

DATA	
1. COLOR	Body is unpainted, vanes are red.
2. OVERALL LENGTH	16.36" (with booster)
3. OVERAL WIDTH	3.15" (at tail support)
4. DIAMETER OF VANES	5.25" (16 Vanes)
5. MATERIAL OF CONSTRUCTION	Steel, aluminum alloy and brass; the brass parts are tin plated and some steel parts are cadmium plated.

6. DESCRIPTION The body and rotary assembly are similar to the Mk 219, Mk 221, and Mk 223. The fuze differs from the Mk 219 and Mk 221 in that the 16 vanes are attached to the vane shaft (1), the lower end of the vane shaft having a flattened surface to fit into a slot in the top of the cap (2). The cap is attached by screws to the pinion carrier (3). This fuze also has a protecting cover (4) similar to the Mk 223, which supports the vane shaft and the arming vane assembly. A window is placed in the protecting cover to show whether or not the fuze is armed.

This fuze differs from the Mk 219, Mk 221, and Mk 223 in the firing assembly in that there are two separate explosive trains. Two firing pin extensions (5) are fitted on the lower end of the lower gear carrier (7). Two delay elements and two delay firing pins are housed in the delay carrier (8). The rotor (9) contains two detonators and the shaft extension nut (10) contains two auxiliary booster lead-ins which are aligned with two booster lead-ins (12) in the fuze body.

7. POSITION AND METHOD OF FIXING IN BOMB	The fuze is screwed into the base plate of the bomb.
8. FUZES LIKELY TO BE FOUND WITH	This fuze is used alone.

9. COMPONENTS OF EXPLOSIVE TRAIN

(1) Delay elements consist of a primer, (one train has an aluminum alloy cup; the other has a brass cup), delay charge of 0.05 grams of black powder, and a special detonator of 0.057 grams of lead azide.
(2) Detonator: 0.096 grams of lead azide.
(3) Auxiliary booster lead in: 0.11 grams of tetryl.
(4) Booster Lead-ins 2.5 grams tetryl with booster separator lead-ins of 0.22 grams of tetryl.
(5) Booster: 38.2 grams of tetryl

10. ARMING TIME 1100 feet of air travel

FUZE DATA [redacted] COPY NO. FILE NO. 2111 AT3

NATIONALITY: U.S. Navy	INFORMATION DATE: Sept. 1943
DESIGNATION: Mk 228 and AN-Mk 228	TYPE OF MISSILE: H.E. Bombs
CLASSIFICATION: Mechanical Impact Tail Fuze with short delay.	BOMBS USED IN: 1000 lb. and 1600 lb. A.P.

11. OPERATION When the bomb is released, the arming wire is withdrawn allowing the arming vanes and vane shaft (1) to rotate. The lower end of the vane shaft (1) is engaged with the cap (2) which rotates the pinion carrier (3) and operates the reduction gears. The alignment of the firing pin extensions (5) delay element, and explosive train is similar to that of Mk 219, Mk 221, and Mk 223. The operation differs in that there are two firing pins and delay elements housed in the delay carrier (8), so the lower gear carrier (7) rotates only 30 degrees before the firing pin extension, firing pin, and delay elements are lined up. The delay carrier lug then engages the delay carrier (8) and these two parts rotate through 60 degrees to align with the detonators in the rotor (9), the delay carrier engaging the rotor and causing it to rotate. The entire assembly then rotates through 90 degrees until the explosive trains are aligned, at which time the rotor hits against the wall of the inner sleeve (13) and 2 spring loaded detents (14) locks the parts in position. On impact, the striker (15) and lower gear carrier (7) are driven forward shearing the shear wire through the supporting collar (16) and spindle (17), the firing pin extensions hit the firing pins, and the explosive trains are initiated.

12. REMARKS:
(a) The fuze incorporates a delay of 0.08 seconds.
(b) The two firing trains are incorporated to insure operation. One firing pin is slightly longer than the other, so the firing trains are not initiated simultaneously.

FUZE DA[redacted] | COPY NO.
FILE NO. 2152.AN1

NATIONALITY: U.S. Navy	INFORMATION DATE: Sept. 1943
DESIGNATION: Mk 232 Mod. 1	TYPE OF MISSILE: Depth Bombs
CLASSIFICATION: Nose Impact or Electrical detonation.	PRINCIPAL MARKING: USN Mk 232

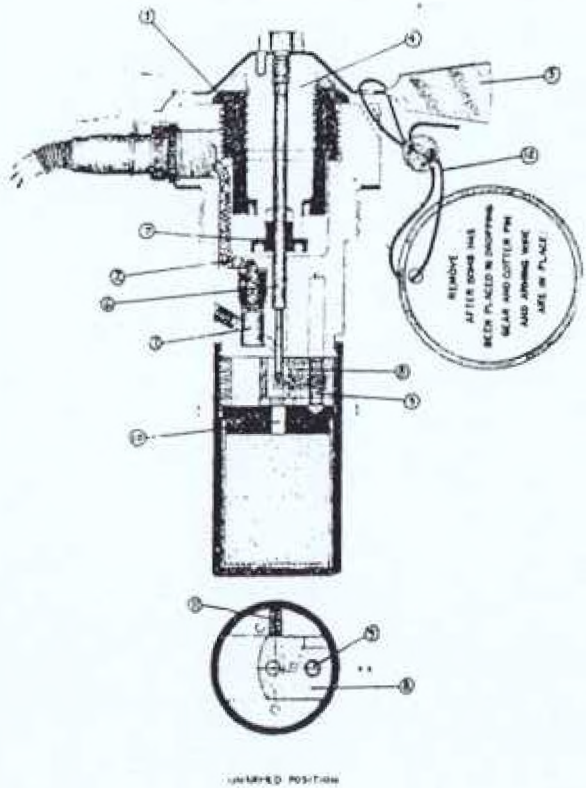

UNARMED POSITION

[redacted]

FUZE DATA

COPY NO.
FILE NO. 2118.AT1

NATIONALITY: U.S. Army, Navy.	INFORMATION DATE: Sept. 1943
DESIGNATION: AN-Mk-230 USN-Mk-229	TYPE OF MISSILE: Aircraft Depth bombs.
CLASSIFICATION: Mech. arming hydrostatic firing, tail fuze.	BOMBS USED IN: AN-Mk-230 in AN-M-64, 65 & 66 G.P. bombs. USN-Mk-229 in 650 lb. depth bombs.

DATA.	AN-Mk-230	USN-Mk-229
1. COLOR	Unpainted.	Unpainted.
	15.395 "	16.4 "
3. OVERALL WIDTH	3.125" body. 5.25" vanes.	3.4" body. 5.25" vanes.
4. MATERIAL OF CONSTRUCTION.	Steel, aluminum alloy and brass.	

5. DESCRIPTION.

The two fuzes are identical, except that the length of that part of the fuse body which fits into the bomb is shorter on the AN-Mk-230 than on the Mk-229. A safety cotter pin (1) holds the vanes from rotation. A vane shaft (2) is keyed to the vanes. At the lower end of the shaft is a system of reduction gears (3) which in turn key into an arming shaft(4). The arming shaft (4) is threaded into a detent retaining cup (5) under the skirt of which is a block containing a spring loaded detent (6) which hold the setting spindle (7) stationary. A depth setting spring (8) with a movable depth setting sleeve (9) is lodged around the arming shaft (4). A depth setting cam (10) with fire surfaces (one for each depth setting) is secured to an external depth setting knob (11). The depth setting cam (10) rests under a projection on the depth setting sleeve (9) so that as the external depth setting knob is rotated the compression on the depth setting spring (8) is varied. At the lower end of the setting spindle is an hydrostatic piston (12) in which the firing spring (13) is housed.

A sylphon bellows (14) surrounds the piston and attaches to its lip. A sleeve (15) from the lower fuse body fits into the mouth of the hydrostatic piston (12). Within this sleeve are the detonator carrier (16) and the detonator (17), the detonator carrier being held in place by retaining balls (18). The fixed firing point (19) is screwed into the fuse body below the detonator carrier. To prevent premature firing of the fuze on impact with water, two inertia counterbalances (20) are secured to the hydrostatic piston assembly. For safety in shipping

[redacted]

FUZE DATA

COPY NO.
FILE NO. 2118.AT1

NATIONALITY: U.S. Army-Navy.	INFORMATION DATE: Sept. 1943
DESIGNATION: AN-Mk-230 USN-Mk-229	TYPE OF MISSILE: Aircraft Depth bombs.

DATA

5. DESCRIPTION. (cont'd).	and storage a safety rod (21) passes through the fuze body, detonator carrier (16) and sleeve (15).
6. POSITION AND METHOD OF FIXING IN BOMB.	Screwed into tail. (7 right hand threads.)
7. FUZES LIKELY TO BE FOUND WITH.	With Mk-229:- the AN-Mk-224 or AN-Mk-234 transverse; and Mk-219 nose. With AN-Mk-230:- the AN-M-103.
8. COMPONENTS OF EXPLOSIVE TRAIN.	Fulminate of mercury and tetryl pellets are found in this detonator. The booster, lead-in, auxiliary lead-in and booster are tetryl.
9. ARMING METHOD	Arming vanes and reduction gears.
10. OPERATION.	On release from the plane the arming wire is withdrawn and the vanes are free to rotate. The rotating of the vanes is transmitted by the vane shaft (2) through a system of reduction gears (3) to the arming shaft (4) the rotating of the arming shaft causes the detent retaining cup (5) to thread up on the arming shaft and releasing the spring loaded detents (6) from their engagement with the setting spindle (7). The fuze is then armed, and on impact with the water the inertia counterbalance prevents the firing assembly from moving down and prematurely firing the fuze because of the decelleration caused by the impact. On travel through the water, water enters two ports in the outer body and through holes in the depth setting mechanism housing. Hydrostatic pressure acting on the sylphon bellows (14) forces the hydrostatic piston (12) downward, compressing the firing spring (13) until the retaining balls (18) fall out into the widened portion of the piston. The detonator carrier (16) is then forced downward by the pressure of the compressed firing spring (13) into the fixed firing point (19) setting off the explosive train.

[redacted]

FUZE DATA | COPY NO. | FILE NO. 2118.A5

NATIONALITY: U.S. Navy	**CLASSIFICATION:** Mechanical Hydrostatic
DESIGNATION: Mk 234 AN-Mk 234	**TYPE OF MISSILE:** Depth Bombs
	BOMBS USED IN: 325 lb. and 650 lb. depth bombs.

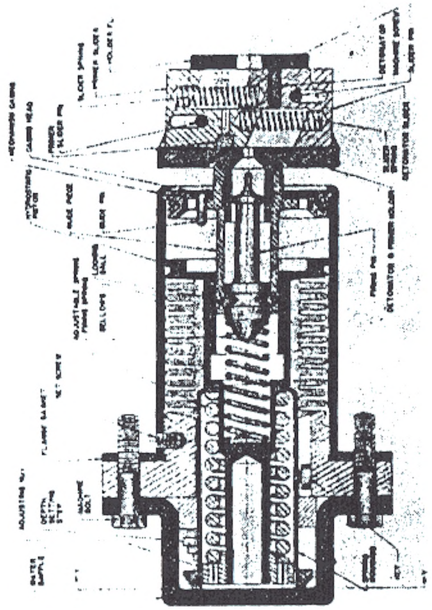

FUZE DA[redacted] COPY NO.
FILE NO. 2152.AM1

NATIONALITY: U.S. Navy	INFORMATION DATE: Sept. 1943
DESIGNATION: Mk 232 Mod. 1	TYPE OF MISSILE: Depth Bombs
CLASSIFICATION: Nose Impact or Electrical detonation.	PRINCIPAL MARKING: USN Mk 232

325 and 650 lb. Depth Bombs.
May also be used in Mk 9, 500 lb. and 1000 lb. LC Bombs.
Mk 12 and Mods 500 lb. Demolition Bombs
Mk 13 and Mods 1000 lb. Demolition Bombs.
AN-M 30, AN-M 57, AN-M 56, AN-M 43, AN-M 44, AN-M 34, AN-M 64, AN-M 65 and AN-M 66.

DATA	Mk 232 Mod. 1
1. COLOR	Unpainted Steel
2. OVERALL LENGTH (Incl Booster)	7.0"
3. OVERALL WIDTH Body Vanes	2.5" 5.125" (16 Vanes)
4. MATERIAL OF CONSTRUCTION	Steel and Brass

5. DESCRIPTION This fuze has a channel from the shoulder down to the lower portion of the striker cavity. In this channel is lodged an electric semi-cap (1) with wiring (2) leading from it out through the fuze shoulder. The fuze is threaded at the upper end to receive the brass collar (3) which in turn is threaded to receive the firing pin block (4) to which the vanes (5) are keyed. The firing pin thread is left-hand. The vanes are held down by the firing pin (6) which is threaded at the top and has a large head screw (7). In the unarmed position, the firing pin (6) protrudes into the lower cavity of the fuze, and holds the spring loaded detonator carrier (8) from aligning the detonator (9) over the booster lead in (10). A spring loaded detent (11) is lodged in the carrier (8) to lock it in place when the armed position is reached.

6. POSITION AND METHOD OF FIXING IN BOMB The fuze screws into the nose of the bomb. (7 R.H.)

7. FUZES LIKELY TO BE FOUND WITH Hydrostatic transverse fuzes AN-Mk 224 or 234; Hydrostatic tail fuzes Mk 229 or AN-Mk 229 or 230.

8. COMPONENTS OF EXPLOSIVE TRAIN Lead Azide Primer Detonator, tetryl booster and tetryl booster lead in.

10. OPERATION AS AN IMPACT FUZE: The safety wire (12) is removed when the bomb is loaded. When the bomb is released, the vanes (5) rotate in a clockwise direction, thus unscrewing and raising the firing pin (6) and firing pin block (4) releasing the detonator carrier (8) and allowing it to spring into position between the firing pin (6) and the booster lead in (10). After 9 revolutions the firing pin block (4) threading is exhausted, and the firing pin ceases rising. Upon impact, the brass collar threads are sheared by the firing pin block and the firing pin is forced into the detonator.

FUZE DATA: [redacted] COPY NO.
FILE NO. 2152.AM1

NATIONALITY: U.S. Navy	INFORMATION DATE: Sept.1943
DESIGNATION: Mk 232 Mod. 1	TYPE OF MISSILE: Depth Bombs
CLASSIFICATION: Nose Impact or Electrical detonation.	PRINCIPAL MARKING: USN Mk 232

OPERATION (Cont'd) AS AN ELECTRIC FUZE: Detonation is initiated by means of the squib being directly fired by an electric current thru the igniter bridge.

11. REMARKS: The impact feature of this fuze will operate only on contact with a hard surface. Does not detonate on water impact at velocities up to 700 ft/second.

FUZE DA[redacted]

COPY NO.
FILE NO. 2122.AN1

NATIONALITY: U.S. Navy	INFORMATION DATE: Sept. 1943
DESIGNATION: Mk 233	TYPE OF MISSILE: Aircraft Demolition Bomb.
CLASSIFICATION: Nose Electrical	PRINCIPAL MARKING: USN Mk33

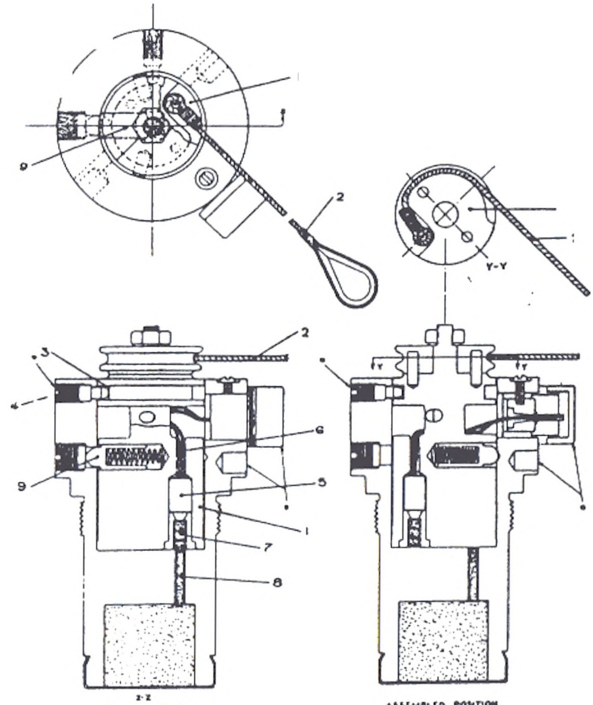

ARMED POSITION

ASSEMBLED POSITION

2638

FUZE DATA [redacted] COPY NO.
FILE NO. 2122.AN1

NATIONALITY: U.S. Navy	INFORMATION DATE: Sept. 1943
DESIGNATION: Mk 233	TYPE OF MISSILE: Aircraft Demolition Bomb.
CLASSIFICATION: Nose Electrical	PRINCIPAL MARKING: USN Mk33
BOMBS USED IN: Mk 4 Mod. 4 100 lb. G.P.	
MARKINGS AND SUBSIDIARY MARKINGS	
DATA	
1. COLOR	Unpainted Steel
2. OVERALL LENGTH	4.510 inches
3. OVERALL WIDTH	2.375 inches
4. MATERIAL OF CONSTRUCTION	Steel

5. DESCRIPTION The body is that of Mk 19 with vanes, cap and rotors removed, and a hole drilled in the shoulder for the accomodation of electric wiring. A rotor block (1) is inserted in the rotor cavity in the fuze body. An arming cord (2) is wound once around the rotor cap and the rotor is held in by a slot (3) and screw (4). The rotor block contains an electric semi-cap (5) with lead in wires (6) and a detonator (7). These units are assembled, unarmed, 180 degrees from the booster lead in (8) in the fuze body. A spring loaded detent (9) is provided to lock the block in position when the firing train is aligned.

6. POSITION AND METHOD OF FIXING IN BOMB	Screwed into nose. (6 R.H.Threads)
7. FUZES LIKELY TO BE FOUND WITH	Used in conjunction with depth bombs which are fuzed with USN MK 232-1.
8. COMPONENTS OF EXPLOSIVE TRAIN	Commercial semi-cap, lead azide detonator and tetryl booster lead in and booster.
9. ARMING METHOD	Half turn of rotor block at 15-25 lb
10. OPERATION	Arming is accomplished after loading by giving the rotor (1) a 1/2 turn. This is done by a 15 to 25 lb pull on the arming cord (2). The fuze operates when the squib is fired directly by an electric current through the igniter bridge.

FUZE DATA [redacted] COPY NO.
FILE NO. 2118.43

NATIONALITY: U.S. Navy	**CLASSIFICATION:** Mechanical Hydrostatic
DESIGNATION: Mk 234 AN-Mk 234	**TYPE OF MISSILE:** Depth Bombs **BOMBS USED IN:** 325 lb. and 650 lb. depth bombs.

DATA

1. COLOR:	Unpainted.
2. OVERALL LENGTH:	Firing Assembly 8.9". Extender Assembly 9.9".
3. OVERALL WIDTH:	3.6".
4. MATERIAL OF CONSTRUCTION:	Bronze, Brass, Steel, and Aluminum.

5. DESCRIPTION: The fuze is essentially the same as the Mk 224. The principal difference is that the Mk 234 has an external depth setting device. The booster and booster extender of this fuse are similar to those of the Mk 224. Reference is made to the description of the Mk 224 for further details of the booster and booster extender.

The depth setting is accomplished by varying the amount the adjustable spring must be compressed as the hydrostatic bellows are expanded because of hydrostatic pressure. The greater the amount the adjustable spring must be compressed, the greater must be the hydrostatic pressure to expand the hydrostatic bellows. The adjustable spring is housed in the spring housing. One end of the spring rests against the spring housing and the other end rests against the adjusting nut which is threaded to the hydrostatic piston. As the hydrostatic piston moves forward the spring housing is carried forward until the lugs on the spring housing come up against the depth setting steps stopping the forward motion of the spring housing and causing the compression of the adjustable spring. When the fuse is set for the 25 foot setting, the lugs on the spring housing will not engage the stepped surface. By rotating the depth setting step, one of the four stepped surfaces on the depth setting step will be placed below the lugs on the spring housing so that for each increased depth setting beyond 25 feet, the adjustable spring will be compressed to a greater degree.

Reference is made to the description of the Mk 224 for further details of description.

6. POSITION AND METHOD OF FIXING IN BOMB:	The pistol and extender assembly are each placed in opposite ends of a transverse tube in the bomb. Each unit is secured in place by bolts into the body of the bomb.
7. FUZES LIKELY TO BE FOUND WITH:	Mk 219 or Mk 221 and Mk 229.
8. ARMING TIME:	It arms immediately on release from plane.
9. COMPONENTS OF EXPLOSIVE TRAIN:	Primer, detonator, sub-booster, and booster.

10. OPERATION: When the bomb is dropped from the plane the arming wire to the booster extender is withdrawn from the jump-out pin. The jump-out pin is thrown out by its spring; the booster spindle is freed, and water is permitted to enter the hole created by the jump-out pin. The

FUZE DATA FILE NO. 2118.43

NATIONALITY: U.S. Navy	**CLASSIFICATION:** Mechanical Hydrostatic
DESIGNATION: Mk 234 AN-Mk 234	**TYPE OF MISSILE:** Depth Bombs

10. OPERATION: (cont'd)
arming wire to the pistol retains the neoprene connector and depth setting knob plug and is positively attached to the depth setting knob plug. As the bomb drops, the arming wire retains the connector and the depth setting knob plug and thus the water entrance hole in the fuze is unsealed. Water pressure is then free to act on the hydrostatic bellows in the booster extender and pistol which align the explosive train, and fire the fuze at the predetermined depth, as in the Mk 224. Reference is made to the Mk 224 for further details of operation.

11. REMARKS:

(1) The fuze may be set to operate at a depth of 25, 50, 75, 100, or 125 feet.

(2) To change the setting of the fuze:

(a) Remove the safety clip from the step lock screw and unscrew about two turns.
(b) Move the depth setting knob to the desired depth as indicated on the head of the pistol.
(c) Tighten the step lock screw and replace safety clip.

FUZE DATA [redacted] FILE NO. COPY NO.

NATIONALITY: U.S. Navy	INFORMATION DATE: Sept. 1943
DESIGNATION: LDT-1	TYPE OF MISSILE: G.P.H.E.
CLASSIFICATION: Long-delay Chemical Tail Fuze.	PRINCIPAL MARKING: Mk 23-3
MARKINGS AND SUBSIDIARY MARKINGS: B.F. Mk 23-3 Lot 20, Date, Mfgs. stamp, Inspectors mark, stamped on fuze body.	BOMBS USED IN: 500 and 1000 lb. G.P. U.S. Navy.
1. COLOR	Unpainted steel
2. OVERALL LENGTH	16.36 inches
3. OVERALL WIDTH Vanes Booster	 5.25 inches 3.25 inches
4. MATERIAL OF CONSTRUCTION	Steel and Brass.

5. DESCRIPTION The operative parts of the fuze are lodged within the standard USN type tail fuze cover. The British No. 37 MK 4 type pistol is threaded into a modified British Adapter. The adapter and pistol is then threaded into the USN Mk 23 fuze body, the booster cavity of which has been machined out to receive a British sensitive type No. 52 detonator and two perforated CE explosive pellets. The adapter is locked to the body by a force fit pin. The vanes of the fuze are keyed to a reach rod which in turn connects with the arming spindle by means of a forked swivel joint. A rubber washer, beneath which is an acetone filled ampoule, rests directly beneath the arming spindle. The ampoule is lodged on a seat in the fuze body, which is partially bored out beneath the ampoule to accomodate several celluoid discs. A small amount of cotton waste lies between the ampoule and the discs. In the lower disc is the countersunk striker screw which threads into the striker body. The striker is spring loaded downward by a spring which bears against the striker sleeve which is in turn spring-loaded downward. The sleeve is held in place by retainer balls against which the beveled shoulder of the sleeve rests. The retainer balls rest in a sloped groove at the base of the threaded joint between the fuze body and the extension collar. Around the lower portion of the collar beneath its shoulder, is a rubber washer which, when properly seated, bears against the rim of the detonator carrier. A small spring-loaded ball is placed in the threads of the fuze body, resting in a slot in such a manner that this ball will jam against the threads in the bomb body if removal is attempted, but will allow the fuze to be inserted freely.

6. POSITION AND METHOD OF FIXING IN BOMB	Screws into tail of bomb. A spring-loaded ball is lodged in the threading as an anti-withdrawal feature.
7. FUZES LIKELY TO BE FOUND WITH	ADN-1
8. COMPONENTS OF EXPLOSIVE TRAIN	British No. 52 (Sensitive Type) Detonator and two perforated CE pellets.
9. ARMING TIME	

FUZE DATA [redacted] FILE NO. COPY NO.

NATIONALITY: U.S. Navy	INFORMATION DATE: Sept. 1943
DESIGNATION: LDT-1	TYPE OF MISSILE: G.P.H.E.
CLASSIFICATION: Long delay Chemical Tail Fuze.	PRINCIPAL MARKING: Mk 23-3
MARKINGS AND SUBSIDIARY MARKINGS B.F. Mk 23-3, LOT 20, Date, Mfgs. stamp, Inspectors mark, stamped on Fuze and body.	BOMBS USED IN: 500 and 1000 lb. G.P. U.S. Navy

10. OPERATION: As a time fuze - The vanes are free to rotate when the bomb is released. Rotation of the arming vanes causes the arming spindle to be screwed down against the rubber sealing washer, thus exerting pressure upon the ampoule and causing the ampoule to break. The acetone thus released flows down thru the cotton waste and comes in contact with the celluloid discs. The acetone gradually dissolves and softens the celluloid discs. When the lower disc has been sufficiently softened, the striker spring forces the striker free of the disc and impells the striker onto the detonator cap, initiating detonation.

Anti-withdrawal operation - On an attempt to unscrew the fuze at any time after insertion in the bomb, the steel anti-withdrawal ball jams in the threads of the bomb case. If an effort is made to withdraw the operational portion of the fuze from the fuze body, the rubber washer on the butt of the extension collar prevents the collar from being removed and causes the body to be unscrewed from the extension collar. This movement allows sufficient clearance for the shoulder of the striker sleeve to force the retainer balls outward. The striker sleeve spring then forces the sleeve, celluloid disc and striker downward, causing the striker to pierce the detonator, initiating explosion of the bomb.

Functioning time - May be varied from 6 to 144 hours by varying the number of discs and the strength of the acetone. No reliance can be placed upon the time settings, however, owing to temperature and position variables.

11. REMARKS: Outward appearance of this fuze is identical to the Mk 23 except that the LDT-1 has two inspection ports rather than one.

Only a very limited number of this fuze was produced and used in the field. The time fuzes principally used now are the M-123, M-124, and M-125 Army Fuzes.

It is not anticipated that any more LDT-1 fuzes will be used.

12. Parts:

1. Vanes
2. Extension rod
3. Arming spindle
4. Ampoule
5. Celluloid discs
6. Striker screw
7. Striker collar
8. Steel balls
9. Striker
10. Sensitive cap
11. Antiwithdrawal locking ball
12. British # 52 detonator
13. Explosive pellets
14. Striker collar spring
15. Striker spring

FUZE DATA [redacted] FILE NO. COPY NO.

NATIONALITY: U.S. Navy	INFORMATION DATE: Sept. 1943
DESIGNATION: LDT-1	TYPE OF MISSILE: G.P.H.E.
CLASSIFICATION: Long-delay Chemical Tail Fuze.	PRINCIPAL MARKING: Mk 23-3
MARKINGS AND SUBSIDIARY MARKINGS: B.F. Mk 23-3 Lot 20, Date, Mfgs. stamp, Inspectors mark, stamped on fuze body.	BOMBS USED IN: 500 and 1000 lb. G.P. U.S. Navy.

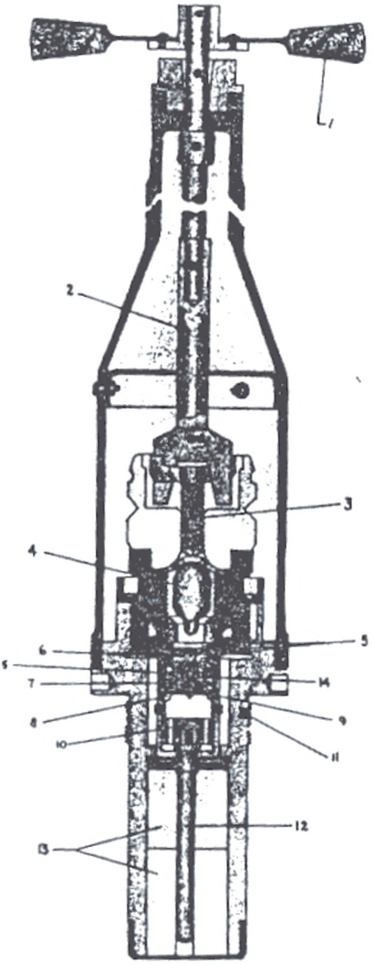

FUZE DATA [redacted] COPY NO. FILE NO.

NATIONALITY: U.S. Navy	INFORMATION DATE: Sept 1943.
DESIGNATION: ADN-1	TYPE OF MISSILE: G.P. H.E.
CLASSIFICATION: Anti-Disturbance Nose Fuze.	PRINCIPAL MARKING: 845/1 or 2
MARKINGS AND SUBSIDIARY MARKINGS: 845/1 or 2 on vanes.	BOMBS USED IN: USN 500 & 1000 lb. G.P.
DATA	

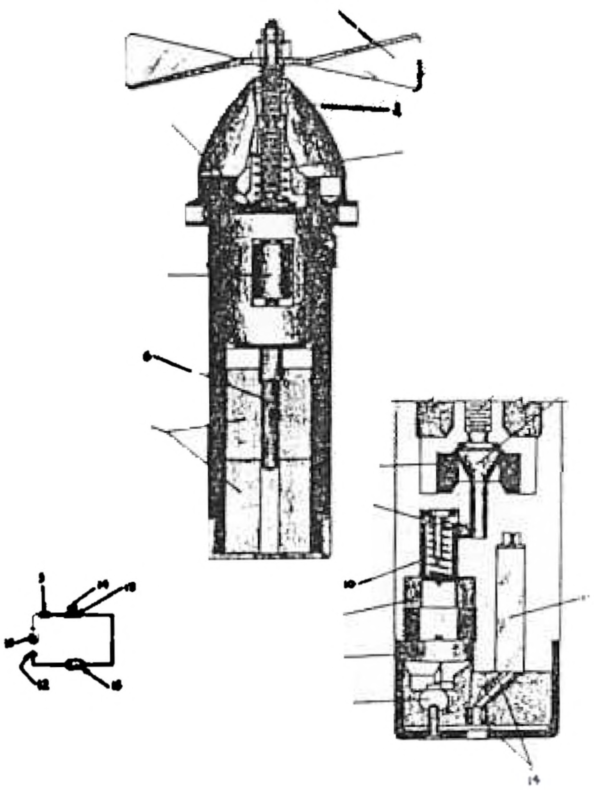

FUZE DATA [redacted] FILE NO. COPY NO.

NATIONALITY: U.S. Navy	INFORMATION DATE: Sept 1943.
DESIGNATION: ADN-1	TYPE OF MISSILE: G.P. H.E.
CLASSIFICATION: Anti-Disturbance Nose Fuze.	PRINCIPAL MARKING: 845/1 or 2
MARKINGS AND SUBSIDIARY MARKINGS: 845/1 or 2 on vanes.	BOMBS USED IN: USN 500 & 1000 lb. G.P.
DATA	
1. COLOR	Unpainted Steel
2. OVERALL LENGTH	7.60 inches
3. OVERALL WIDTH Vanes Body	 4.5 inches 1.875 inches
4. MATERIAL OF CONSTRUCTION	Steel

5. DESCRIPTION The body of the USN Mk 21 fuze is hollowed out so that the British No. 845 can be screwed into the upper portion. A threaded force fit collar inside the Mk 21 body allows a tight fit of the threaded joint. Below the No. 845 is a felt washer, thru which the detonator tube is fitted. Around the detonator (6) are placed the two perforated CE pellets (7). The vanes (1) are held in transit by a safety fork and by vane nubs which fit into slots of the fuze body. The vanes are spring loaded to key into the end of the arming spindle (2) when the fork is removed. The arming spindle is partly cut away at a point half way along its threaded length. The base of the spindle is flanged. Directly beneath the spindle is an inverted cone (4) which is held in position by a creep spring (3). An inertia ring (8) is seated around the cone. At the seat of the cone tip is a bored slot leading into the contact plunger cavity. A steel ball (9) rests in this slot and bears against the cone. The ball fits into a groove in the spring loaded plunger (10) and holds it in place. The contact plunger, the tip of which is blunt, lies above a contact plate (12). Between the last named pieces is a plastic delay washer(11). Wired to the contact plate is a mercury switch (15) which lies in the horizontal plane of the fuze. The lead from the switch leads to the electric squib (13). A 1.5 volt dry cell (5) is also included in the circuit and it in turn is wired thru the delay plunger.

6. POSITION AND METHOD OF FIXING IN BOMB	Screws into nose of bomb. A spring loaded ball lodged between the threads acts as an anti-withdrawal device.
7. FUZES LIKELY TO BE FOUND WITH	LDT-1
8. COMPONENTS OF EXPLOSIVE TRAIN	Electric squib (13), gunpowder pellets (14), British #D 38 detonator (6) and two perforated C.E. exploder pellets (2).
9. ARMING TIME	

10. OPERATION The safety fork is removed when the bomb is released. The vanes (1) are forced to key to the spindle by the spring action. The vanes rotate, unscrewing the arming spindle (2) until the flange jams against the fuze body. The kinetic force of the spindle's movement causes the spindle to break at the weakened point, the vanes protruding portion of the spindle falling free. The Cone (4) is thus

FUZE DATA [redacted] FILE NO. COPY NO.

NATIONALITY: U.S. Navy	INFORMATION DATE: Sept. 1943
DESIGNATION: ADN-1	TYPE OF MISSILE: G.P.H.E.
CLASSIFICATION: Anti-disturbance Nose Fuze.	PRINCIPAL MARKING: 845/1 or 2

OPERATION (Cont'd) free to move forward on impact, overcoming the creep spring (3). This movement allows the spring loaded delay plunger (10) to force the retainer ball (9) into the space thus left vacant. The strong spring then forces the plunger through the plastic delay washer (11) until the pluger touches the contact plate (12). This movement requires 20 seconds and allows the bomb to come to rest. Upon any subsequent movement of the bomb, the mercury switch (15) will colse, firing the squib (13). The current flow being from the dry cell (5) thru the delay plunger spring, delay plunger (10) contact plate (12) mercury switch (15) igniter bridge (13) and back to the dry cell (5).

11. REMARKS: Only a very limited number of these fuzes were produced and used in the field. It is not anticipated that any more will be furnished.

It is possible that an anti-disturbance fuze will be developed by the Army to use in connection with the time fuze. The new fuze will probably be on the same principle as the ADN-1.

2633

INDEX

ALLIED BOMBS & FUZES

BRITISH BOMBS - SECTION 2

SIZE	TYPE	FILE NO.	NO. OF PAGES
	General Information	1200	2
20 lb. Mk. I, II & III 20 lb. Mk. I, II & III	Anti-personnel (Stabilized) Anti-personnel (Parachute equipped)	1211.1	2
5 oz. Mk. I 6½ oz. Mk. V	Incendiary Bomb	1221.1	2
4 lb. Mk. I	Incendiary Bomb	1221.2	2
25 lb. Mk. I & II	Incendiary Bomb	1222.1	2
40 lb. Mk. I, II & III 40 lb. Mk. I, II & III	G.P.-H.E. (Stabilized) G.P.-H.E. (Parachute equipped)	1252.1	2
50 lb. Mk. I 120 lb. Mk. I	G.P.-H.E. Bomb	1253.1	2
112 lb. R.L. Mk. V, VI & VII	G.P.-H.E. Bomb	1253.2	2
230 lb. R.F.C. Mk. I, II & III	G.P.-H.E. Bomb	1254.1	2
250 lb. R.L. Mk. I or II	G.P.-H.E. Bomb	1254.2	2
250 lb. Mk. I 500 lb. Mk. I	G.P.-H.E. Bomb	1254.3	2
250 lb. Mk. IV 500 lb. Mk. IV	G.P.-H.E. Bomb	1254.4	2
500 lb. R.A.F. Mk. I 520 lb. R.L. Mk. I	G.P.-H.E. (Light case) Bomb	1254.5	2
550 lb. R.A.F. Mk. I 550 lb. R.L. Mk. I	G.P.-H.E. Bomb	1255.1	2
1400 lb. S.N.	G.P.-H.E. (Light case) Bomb	1256.1	2
1000 lb. Mk. II 1900 lb. Mk. II	G.P.-H.E. Bomb	1256.2	1
2000 lb. 4000 lb. 8000 lb.	G.P.-H.E. (High Capacity) Bombs	1259.1	
250 lb. Mk. II 250 lb. Mk. V 500 lb. Mk. II 500 lb. Mk. V	S.A.P.-H.E. Bomb	1264.1	2
450 lb. Mk. II 2000 lb. Mk. I	A.P.-H.E. Bomb	1276.1	2
100 lb. Mk. I & II 250 lb. Mk. I & II 500 lb. Mk. I & II	Anti-submarine H.E. Bomb	1284.1	2
100 lb. Mk. IV 250 lb. Mk. IV 500 lb. Mk. IV	Anti-submarine H.E. Bomb	1284.2	2
8½ lb. Mk. II 11 lb. Mk. I	Practice Smoke or Flash Bomb	1291.1	2

INDEX

ALLIED BOMBS & FUZES

U.S. FUZES - SECTION 3

PART A. - U.S. NAVY FUZES

DESIGNATION	TYPE	FILE NO.	NO. OF PAGES
	General Information	2100.0	1
Mk. XIII Mod. 2	Mechanical Impact Nose Fuze	2111.AN1	[illegible]
Mk. XIX Mod. 2, 3 & 4 Mk. XXI Mod. 1, 3 & 4	Mechanical Impact Nose Fuze	2111.AN2	4
Mk. 27	Mechanical Impact Nose Fuze	2111.AN3	2
Mk. 32	Mechanical Impact Nose Fuze	2111.AN4	2
Mk. XV Mod. 1	Mechanical Impact Tail Fuze	2111.AT1	2
Mk. 23, Mod. 1, 3 & 4	Mechanical Impact Tail Fuze	2111.AT2	2
Mk. 28 Mk. 28, Mod. 1	Mechanical Impact Tail Fuze	2111.AT3	2
Mk. 29	Mechanical Hydrostatic Tail Fuze	2118.A1	1
Mk. 24 Mk. 24, Mod. 1	Mechanical Hydrostatic Fuze	2118.A2	4
PART B. - U.S. ARMY M SERIES			
M 100 M 101 M 102	Mechanical Impact Tail Fuze	2111.B1	2
M 103	Mechanical Impact Nose Fuze	2111.B2	2
M 104 M 109	Mechanical Impact Nose Fuze	2111.B3	2
M 105	Mechanical Impact Nose Fuze	2111.B4	2
M 106 M 106 Long	Mechanical Impact Tail Fuze	2111.B5	2
M 108	Mechanical Impact Nose Fuze	2111.B6	2
M 110	Mechanical Impact Nose Fuze	2111.B7	2
M 107	Mechanical Time Nose Fuze	2142.B1	1
M 111 T7E1	Mechanical Time Nose Fuze	2142.B2	2
PART C. - U.S. ARMY-NAVY FUZES			
AN M100A1 AN M101A1 AN M102A1	Mechanical Impact Tail Fuze	2111.C1	2
AN M103	Mechanical Impact Nose Fuze	2111.C2	2
AN Mk. 24	Mechanical Hydrostatic Fuze	2118.C[illegible]	4

2638

INDEX

ALLIED BOMBS & FUZES			
BRITISH FUZES - SECTION 4			
DESIGNATION	TYPE	FILE NO.	NO. OF PAGES
	General Information	2200	2
D.A. No. 8 Mk. I D.A. No. 9 Mk. I	Mechanical Impact Nose Fuze	2211.N1	2
	Mechanical Impact Nose Fuze	2211.N2	2
D.A. N D.A. N D.A. N	Mechanical Impact Nose Fuze	2211.N3	2
D.A. No. 16 Mk. I	Mechanical Impact Nose Fuze	2211.N4	2
D.A. No. 19 Mk. I D.A. No. 19 Mk. II D.A. No. 20 Mk. I D.A. No. 20 Mk. II D.A. No. 20 Mk. III D.A. No. 27 Mk. I	Mechanical Impact Nose Fuze	2211.N5	2
D.A. No. 29 Mk. I D.A. No. 34 Mk. I	Mechanical Impact Nose Fuze	2211.N6	2
D.A. No. 32 Mk. II* D.A. No. 32 Mk. III	Mechanical Impact Nose Fuze	2211.N7	2
D.A. No. 33 Mk. I	Mechanical Impact Nose Fuze	2211.N8	2
No. 5B Mk. I No. 5B Mk. II No. 23 Mk. I/A/	Mechanical Impact Tail Fuze	2211.T1	2
No. 12 Mk. I	Mechanical Impact Tail Fuze	2211.T2	2
No. 21 Mk. I No. 21 Mk. II No. 22 Mk. I No. 22 Mk. II	Mechanical Impact Tail Fuze	2211.T3	2
No. 28 Mk. I No. 28 Mk. II	Mechanical Impact Tail Fuze	2211.T4	2
No. 30 Mk. I	Mechanical Impact Tail Fuze	2211.T5	2
No. 30 Mk. II No. 30 Mk. III No. 37 Mk. I	Mechanical Impact Tail Fuze	2211.T6	1
No. 34 Mk. I	Mechanical Impact Tail Fuze	2211.T7	2
No. 28 Mk. I/A/ No. 28A Mk. II No. 28D Mk. II	Mechanical-Pyrotechnic Nose Fuze	2214.N1	2
No. 35 Mk. I No. 35 Mk. II	Mechanical-Pyrotechnic Nose Fuze	2214.N2	2
No. 37 Mk. I	Chemical Long-Delay Tail Fuze	2233.T1	2

COPY NO.________

BOMB DATA

FILE NO.: 1211.1

NATIONALITY: BRITISH	INFORMATION DATE: October 1942
SIZE: 20 lb. Mark I, II, III (Stabilized) 20 lb. Mark I, II, III (Parachute-equipped)	TYPE: Anti-personnel (Fragmentation)
TARGET: Personnel, motor convoys, airplanes on the ground, etc. Used against ground targets by airplanes flying at low altitudes.	FUZES (Nose): D.A. No. 16 Mark I (20 lb. Mark I only) D.A. No. 29 Mark I

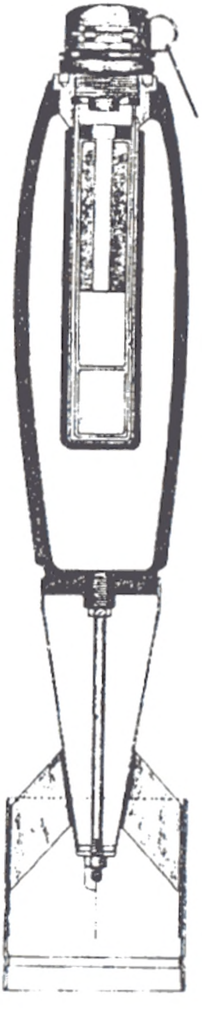

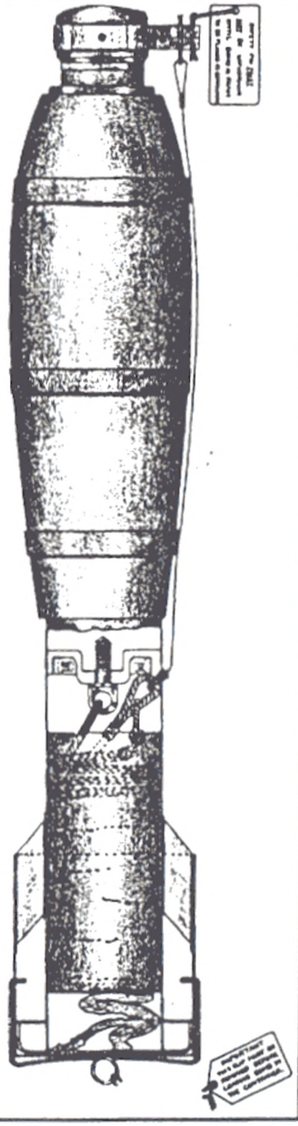

2638

BOMBS AND FUZES

SECTION II

BRITISH BOMBS

NATIONALITY: BRITISH	INFORMATION DATE: October 1942

GENERAL INFORMATION

SHAPE British bombs have the following in common: They are fully streamlined, fuzed in the nose and/or tail, and suspended by one lug on the side over the center of gravity, i.e. 1/3 back from the nose on the overall length of the bomb. The standard length is five times the maximum diameter.

CONSTRUCTION The General Purpose bombs are of cast iron, and the Armor-Piercing and Semi-Armor-Piercing of forged steel construction. The recently developed High Capacity bombs, used in the heavy raids on the German cities because of their great blast effect, are of "boiler plate", welded construction, consisting of very thin walls and a 75% loading factor.

This is an exception to the low loading factors characteristic of all other types of British bombs. For General Purpose bombs the figure is about 30%; for Semi-Armor-Piercing, 17%; and for Armor-Piercing, 8%.

FILLER The fillers are: Amatol for the General Purpose and High Capacity types, T.N.T. for the Semi-Armor-Piercing, and Shellite for the Armor-Piercing types. Shellite is picric plus dinitrobenzene.

COLOR Formerly all British bombs were painted Yellow, but this color is now Olive Drab. This should be kept constantly in mind in examining the following pages which contain references, based on earlier sources, to the Yellow body color. Practice bombs are painted black.

MARKINGS The standard markings of British bombs are as follows:-

1. Red and green criss-cross hatched rings denote an amatol filler.

2. Red Ring painted on the bomb means that it has been filled.

3. Green Ring means composition exploding booster C.E. (Tetryl). T.N.T. stencilled on top of the Green Ring means that there is a T.N.T. booster in addition to the C.E. one.

4. A White Ring around the nose above the Red Ring indicated a Semi-Armor-Piercing bomb.

5. White Rings around the nose on either side of the Red band indicates an Armor-Piercing bomb.

STENCILLING All British bombs are stencilled on the body and the following items are shown: Type of filling, such as Baratol, Amatol, or T.N.T. (Trytol); type of bomb; weight class; mark number; company or station filling the bomb; date of filling; lot number; and on bombs over 20 lbs., the actual weight of the bomb complete with tail but without fusing components. A typical example would be as follows:-

G.P. 120 I
Bar. 10/90
R 25/2/42
Lot. 1234
118 lbs.

COPY NO. ___

BOMB DATA FILE NO.: 1200

NATIONALITY: BRITISH	INFORMATION DATE: October 1942

GENERAL INFORMATION

There are ten main types of British bombs likely to be in present production. Certain obsolete classifications are nevertheless included, for existing stocks of these may not be entirely exhausted. It is reported that the Japanese have captured stocks of British bombs in Malaya and it is entirely possible that these stocks (some of which may be obsolete) will be used by the enemy.

The ten main types are presented in the following order and identified by these abbreviations:-

F---Fragmentation
GP---General Purpose
MC---Medium Capacity
HC---High Capacity
SAP---Semi-Armor-Piercing
AP---Armor-Piercing
AS---Anti-Submarine
Incendiary
Practice
Small Yellow AA bomb.

The following identifications are no longer used, and the bombs indicated thereby are only to be found in very old stocks:-

R.A.F.
S.N. (reported to be a very old bomb once used against Essen, Germany, and hence the name "S...N").
R.L. (meaning made at Royal Laboratories, Woolsey).

It should be noted that all airplanes now being received by the British from the United States are so adapted that AN bombs and fuzes, as well as British, can be carried.

BOMB DATA

COPY NO.

FILE NO.: 1221.2

NATIONALITY: BRITISH	INFORMATION DATE: October 1942
SIZE: 4 lb. Mark I	TYPE: Incendiary Bomb
TARGET: Frame or non-fireproof construction.	FUZES (Tail): Simple impact fuze contained in rear of body.

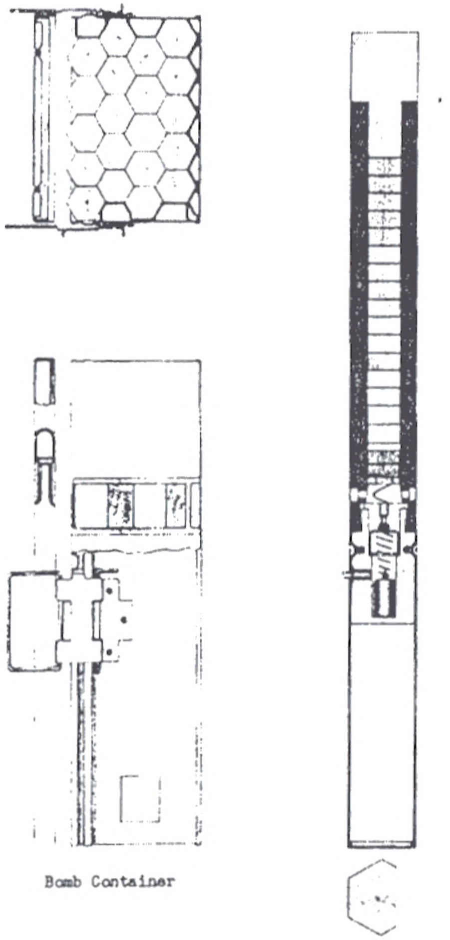

Bomb Container

2 8

BOMB DATA

COPY NO

FILE NO.: 1211.

NATIONALITY: BRITISH	INFORMATION DATE: October 1942
SIZE: 20 lb. Mark I, II, III (Stabilized) 20 lb. Mark I, II, III (Parachute-equipped)	TYPE: Anti-personnel (Fragmentation)
TARGET: Personnel, motor convoys, airplanes on the ground, etc. Used against ground targets by airplanes flying at low altitudes.	FUZES (Nose) D.A. No. 16 Mark I (20 lb. Mark I only) Mark

	DATA	20 lb. (Stabilized)	20 lb. (Parachute)
1	OVERALL LENGTH	21.35 inches	
2	LENGTH OF BODY	12.8 inches	12.8 inches
3	DIAMETER OF BODY	Mk. I 5.1 inches Mk. II & III 3.95 inches	3.95 inches
4	THICKNESS OF WALL	0.4 inch	0.4 inch
5	MATERIAL OF WALL	Steel	Steel
6	CONSTRUCTION OF BODY	The body consists of a cast or forged steel case, streamlined in shape, threaded at the nose to take the fuse adapter and fitted with a base plug shaped to receive the tail assembly.	
7	TYPE OF SUSPENSION	These bombs are suspended horizontally.	
8	CONSTRUCTION OF SUSPENSION LUG	The Mark I and II bombs are equipped with eyebolts which consist of U-shaped bars rivetted to the case. The Mark II bombs do not have eyebolts but all of the 20 lb. bombs are designed to be carried in standard small bomb containers.	
9	COLOR & MARKINGS ON BOMB AND TAIL	The bomb case and tail assembly are painted yellow; the bomb case having a green band around the largest diameter and a red band around the nose. If the filling is T.N.T., "Trotyl" is stencilled in three places on the green band or if Amatol is used, the fraction 80/20 appears in three places on the green band.	
10	LENGTH OF TAIL	Mk. I 10.5 inches Mk. II & III 9.0 inches	Parachute case.
11	WIDTH OF TAIL	Mk. I 6.5 inches Mk. II & III 3.8 inches	
12	MATERIAL OF TAIL	Mk. I - Wood & Mild steel Mk. II & III - Mild steel	Parachute case - Steel. Parachute - White silk.
13	CONSTRUCTION OF TAIL	The tail of the Mark I bomb consists of a wooden cone secured to the base plug by a single bolt with four mild steel vanes attached to cone. Mark II & III bombs differ in that the cone is of steel.	A cylindrical steel parachute case to which four narrow vanes are welded is secured to the bomb body by a bolt. A circular ring welded to the vanes directs the wind against a closing cap which is held in place by a transit clip.
14	WEIGHT OF TAIL		
15	TYPE OF FILLING	Two types of filling may be used: 1) Trotyl (T.N.T.); 2) 80/20 Amatol. The figures given below are for Mark I bombs only.	
16	WEIGHT OF FILLING	1) 5 lbs. 4 oz. 2) 4 lbs. 2 oz.	
17	TOTAL WEIGHT OF BOMB	1) 22 lbs. 12 oz. 2) 21 lbs. 10 oz.	
18	CHARGE / WEIGHT RATIO		

COPY NO.

BOMB DATA

FILE NO.: 1221.1

NATIONALITY: BRITISH	INFORMATION DATE: October 1942
SIZE: 5 oz. Mark I 6½ oz. Mark V	TYPE: Incendiary Bomb
TARGET: Used against light frame construction.	FUZE: Striker in nose piece of bomb detonates charge in bottom of cartridge.

5 oz. Mark I

Cartridge for 5 oz. Mark I

6½ oz. Mark V

Cartridge for 6½ oz. Mark V

2630

COPY NO.—

BOMB DATA FILE NO.: 1221.1

NATIONALITY: BRITISH	INFORMATION DATE: October 1942
SIZE: 5 oz. Mark I 6½ oz. Mark V	TYPE: Incendiary Bomb
TARGET: Used against light frame construction.	FUZE: Striker in nose piece of bomb detonates charge in bottom of cartridge.

	DATA	5 oz. Mark I	6½ oz. Mark V
1	OVERALL LENGTH	6.0 inches	6.5 inches
2	LENGTH OF BODY	4.5 inches	4.2 inches
3	DIAMETER OF BODY	0.95 inches	0.95 inches
4	THICKNESS OF WALL		
5	MATERIAL OF WALL	The wall of the outer case are of tinned plate, the nose is a mild steel casting and the cartridge has an aluminum container.	
6	CONSTRUCTION OF BODY	These bombs are constructed as follows: A cast steel nose piece of which the striker is an integral part; a cylindrical shell of tinned plate is crimped in the nose; a shear ring is formed on the body just in rear of the nose. The inner container or cartridge is made of aluminum of a similar shape to a shotgun shell. This cartridge rests on the shear ring until impact occurs. The difference in weight of the two bombs comes from the heavier nose of the 6½ oz. bomb.	
7	TYPE OF SUSPENSION	These bombs are carried in containers.	
8	CONSTRUCTION OF SUSPENSION LUG	There is no individual suspension.	
9	COLOR & MARKINGS ON BOMB AND TAIL	These are obsolete bombs and the color and markings are not known.	
10	LENGTH OF TAIL		2.1 inches
11	WIDTH OF TAIL	0.95 inches	0.95 inches
12	MATERIAL OF TAIL	Tinned plate.	Tinned plate.
13	CONSTRUCTION OF TAIL	Four vanes are fitted to a dome-shaped cap which slides over bomb case and is held in position by lugs on body bent over the cap. A cap covers the rear of the tail vanes.	Four vanes are fitted to a domed cap which is a push fit over the bomb body. A domed cap is fastened to the rear of the tail vanes.
14	WEIGHT OF TAIL		
15	TYPE OF FILLING	The filling of these bombs is a British incendiary composition known as "Cendite". It is ignited by a cap in the cartridge base which ignites the priming and in turn the igniter.	
16	WEIGHT OF FILLING	2.5 ozs.	2.0 ozs.
17	TOTAL WEIGHT OF BOMB	5.0 ozs.	6.5 ozs.
18	CHARGE / WEIGHT RATIO	50.0 %	30.0 %

COPY NO.

BOMB DATA

FILE NO.: 1222.1

NATIONALITY: BRITISH	INFORMATION DATE: October 1942
SIZE: 25 lb. Mark I and II	TYPE: Incendiary
TARGET: Used against frame or non-fireproof construction.	FUZE (Tail): The fuze is a simple striker pellet type with a shear wire and creep spring. The striker is contained in a central brass tube.

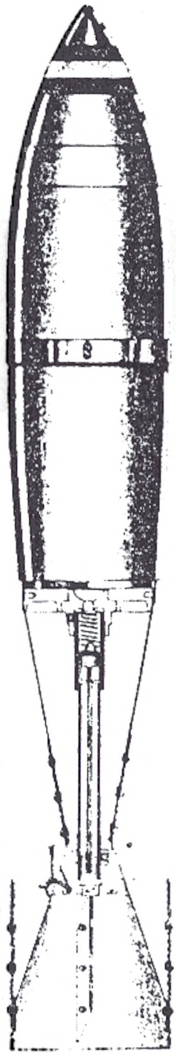

COPY NO. 2638

BOMB DATA

FILE NO.: 1222.1

NATIONALITY: BRITISH	INFORMATION DATE: October 1942
SIZE: 25 lb. Mark I and II	TYPE: Incendiary
TARGET: Used against frame or non-fireproof construction.	FUZE: Tail: The fuze is a simple striker pellet type with a shear wire and creep spring. The striker is contained in a central brass tube.

	DATA	
1	OVERALL LENGTH	32.6 inches
2	LENGTH OF BODY	
3	DIAMETER OF BODY	5.03 inches
4	THICKNESS OF WALL	
5	MATERIAL OF WALL	Steel
6	CONSTRUCTION OF BODY	The body consists of a sharp, cast steel nose joined to a cylindrical steel case and a flat steel base plate in which is screwed a tail adapter holding the tail-blowing charge. A central brass tube containing the fuze assembly is threaded into the adapter. The cylindrical section of the bomb body is streamlined externally with cardboard.
7	TYPE OF SUSPENSION	This bomb is suspended horizontally or in a small bomb container.
8	CONSTRUCTION OF SUSPENSION LUG	For individual suspension there is an eyebolt secured to a band around the body near the center of gravity.
9	COLOR & MARKINGS ON BOMB AND TAIL	The bomb body is painted a dull red with a 1/2 inch bright red band around the nose and two (2) 1/2 inch bands of black on each side of the red band. Manufacturer's and filling agency's markings may be found stencilled on bombs.
10	LENGTH OF TAIL	approx. 14.0 inches
11	WIDTH OF TAIL	5.0 inches
12	MATERIAL OF TAIL	Aluminum
13	CONSTRUCTION OF TAIL	The tail assembly consists of: a cone which is secured to the base plate by four screws; four vanes are rivetted to the cone; and a cylinder is rivetted to the vanes for reinforcing.
14	WEIGHT OF TAIL	
15	TYPE OF FILLING	The filling consists of a mixture of magnesium and thermite.
16	WEIGHT OF FILLING	Magnesium 5 lbs. 0 ozs. Thermite 6 lbs. 4 ozs.
17	TOTAL WEIGHT OF BOMB	Approx. 25 lbs.
18	CHARGE / WEIGHT RATIO	Approx. 45 %

COPY NO.

BOMB DATA FILE NO.: 1252.1

NATIONALITY: BRITISH	INFORMATION DATE: October 1942
SIZE: 40 lb. Mark I, II, III (Stabilized) 40 lb. Mark I, II, III (Parachute equipped)	TYPE: G.P.-H.E. General Purpose
TARGET: General Bombardment.	FUZE (Nose): Pistol D.A. No. 29 Mark I

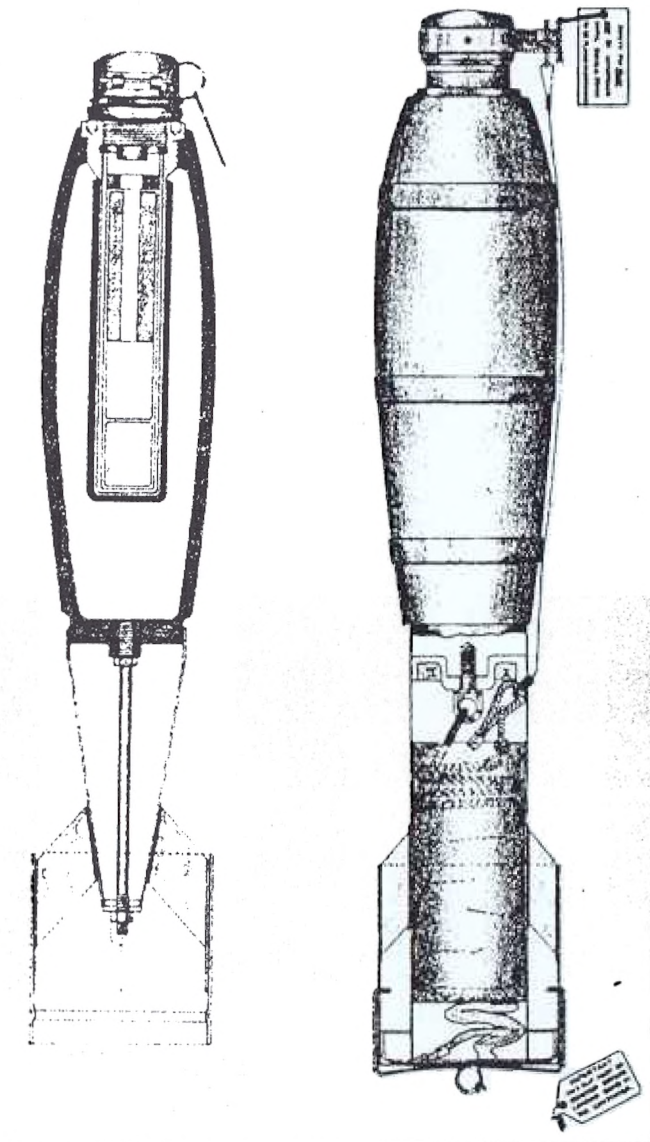

COPY NO. 2638

BOMB DATA

FILE NO.: 1221.2

NATIONALITY: BRITISH		INFORMATION DATE: October 1942
SIZE: 4 lb. Mark I		TYPE: Incendiary Bomb
TARGET: Frame or non-fireproof construction.		FUZES (Tail): Simple impact fuse contained in rear of body
	DATA	4 lb. Mark I
1	OVERALL LENGTH	21.5 inches
2	LENGTH OF BODY	
3	DIAMETER OF BODY	1.67 inches
4	THICKNESS OF WALL	approx. 0.5 inch
5	MATERIAL OF WALL	Chromated magnesium body with steel nose.
6	CONSTRUCTION OF BODY	The body is constructed very similar to the American 4 lb. AN-M 50A1. The magnesium case is a hexagonal casting in which a blunt steel nose is secured. The rear of the magnesium casting is threaded to receive the simple, impact fuse.
7	TYPE OF SUSPENSION	These bombs are carried in a case containing 20 bombs. Three of these cases can be loaded into a 250 lb. small bomb container which therefore carries 60 bombs.
8	CONSTRUCTION OF SUSPENSION LUG	There is no provision for individual suspension.
9	COLOR & MARKINGS ON BOMB AND TAIL	The body of the bomb is painted a dull red for a distance of 3.5 inches from the nose. In the center of the dull red portion is painted a 1.5 inch black band and centrally over this is a 1/2 inch bright red band. Manufacturer's or filler's markings may be stencilled on bomb body.
10	LENGTH OF TAIL	
11	WIDTH OF TAIL	1.67 inches
12	MATERIAL OF TAIL	Tinned plate.
13	CONSTRUCTION OF TAIL	The tail assembly consists of a hexagonal tinned plate pressing with a male-type closing cap at the rear. The tail is secured to the fuse body by drive screws and has a side opening for the safety plunger.
14	LENGTH OF TAIL	
15	TYPE OF FILLING	The filling is an incendiary composition which melts the magnesium case. The case burns for about 10 minutes.
16	WEIGHT OF FILLING	6.75 oz.
17	WEIGHT OF CASE	Magnesium 1 lb. 9.5 oz. Steel 1 lb. 8.0 oz.
18	TOTAL WEIGHT OF BOMB	3 lbs. 13.5 oz.
19	CHARGE WEIGHT RATIO	26.4 %

COPY NO.

BOMB DATA

FILE NO.: 1253.2

NATIONALITY: BRITISH	INFORMATION DATE: October 1942
SIZE: 112 lb. R.L. Mark V, VI & VII	TYPE: G.P.-H.E. Bomb
TARGET: General Bombardment.	FUZES: NOSE: D.A. No. 8 Mark I; D.A. No. 19 Mark I or II. TAIL: No. 5B Mark I or II

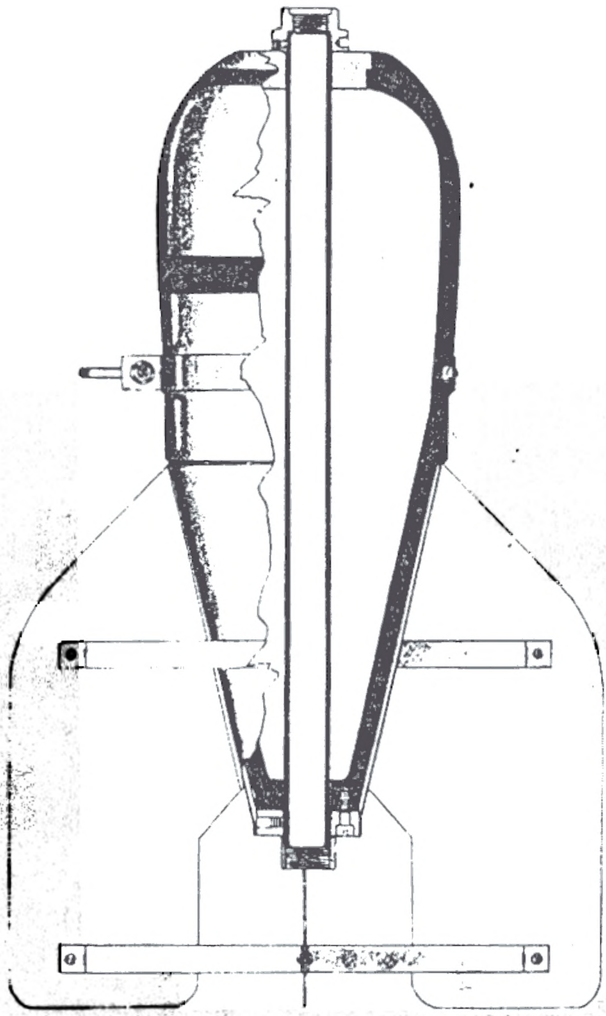

COPY NO. 2638

BOMB DATA FILE NO.: 1252.1

NATIONALITY: BRITISH	INFORMATION DATE: October 1942
SIZE: 40 lb. Mark I, II, III (Stabilised) 40 lb. Mark I, II, III (Parachute equipped)	TYPE: G.P.-H.E. General Purpose
TARGET: General Bombardment	FUZE (Nose): Pistol D.A. No. 29 Mark I

	DATA	40 lb. Stabilised bomb	40 lb. Parachute bomb
1	OVERALL LENGTH	27.25 inches	
2	LENGTH OF BODY	16.75 inches	16.75 inches
3	DIAMETER OF BODY	5.05 inches	5.05 inches
4	THICKNESS OF WALL		
5	MATERIAL OF WALL	Steel	Steel
6	CONSTRUCTION OF BODY	The body consists of a cast or forged steel case, streamlined in shape, threaded at the nose to take the fuse adapter and fitted with a base plug shaped to receive the tail assembly. These bombs are similar in construction but vary slightly in the diameter.	
7	TYPE OF SUSPENSION	These bombs are suspended horizontally.	
8	CONSTRUCTION OF SUSPENSION LUG	The Mk. I bombs may have a suspension eyebolt welded to a band passing around the center of gravity; the Mk. II bombs have no eyebolt while the Mk. III bombs have eyebolts welded to the body. All of these bombs are primarily for use in small bomb containers.	
9	COLOR & MARKINGS ON BOMB AND TAIL	The bomb case and tail assembly are painted yellow; the bomb case having a green band around the largest diameter and a red band around the nose. If the filling is T.N.T., "Trotyl" is stencilled in three places on the green band or if Amatol is used, the fraction "80/20" appears in three places on the green band.	
10	LENGTH OF TAIL	10.5 inches	Parachute case
11	WIDTH OF TAIL	4.88 inches	
12	MATERIAL OF TAIL	Mild steel.	Mild steel.
13	CONSTRUCTION OF TAIL	The tail consists of a tail cone secured to the body by a bolt screwed into the base plug; four vanes rivetted to the cone and reinforced by a cylinder rivetted to the vanes.	A cylindrical steel parachute case to which four narrow vanes are welded (?) is secured to the bomb body by a bolt. A circular ring welded to the vanes directs the wind against a closing cap which is held in place, until dropped, by a transit clip.
14	WEIGHT OF TAIL		
15	TYPE OF FILLING	Two types of filling may be used, the most common being: 1) Trotyl (T.N.T.) although 2) 80/20 Amatol may be used. The central exploder tube is T.N.T.	
16	WEIGHT OF FILLING		
17	TOTAL WEIGHT OF BOMB		
18	CHARGE / WEIGHT RATIO		

COPY NO.—

BOMB DATA

FILE NO.: 1253.1

NATIONALITY: BRITISH	INFORMATION DATE: October 1942
SIZE: 50 lb. Mark I 120 lb. Mark I	TYPE: G.P.-H.E. Bomb
TARGET: General Bombardment.	FUZES: NOSE: D.A. No. 19 Mk. I or II TAIL: No. 21 Mk. I or II

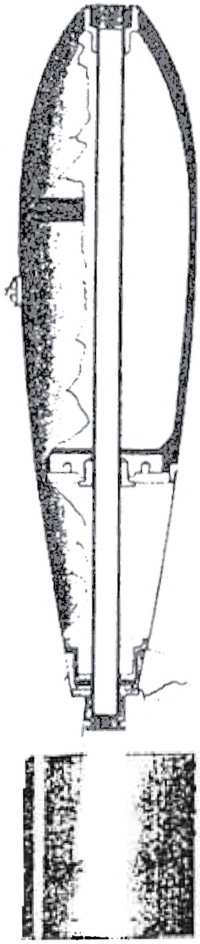

120 lb. Mark I

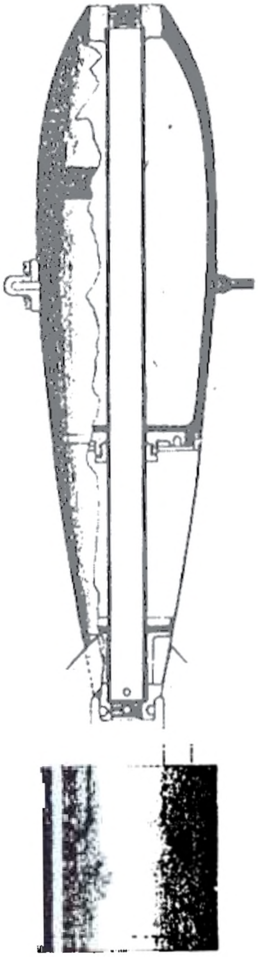

50 lb. Mark I

(These bombs are not drawn to the same scale)

COPY NO. 6

BOMB DATA

FILE NO.: 1253.1

NATIONALITY: BRITISH	INFORMATION DATE: October 1942
SIZE: 50 lb. Mark I 120 lb. Mark I	TYPE: G.P. - H.E.
TARGET: General Bombardment	FUZES: NOSE: D.A. No. 19 Mk. I or II TAIL: No. 21 Mk. I or II

	DATA	50 lb. Mark I	120 lb. Mark I
1	OVERALL LENGTH	30.7 inches	42.3 inches
2	LENGTH OF BODY	15.0 inches	21.5 inches
3	DIAMETER OF BODY	5.9 inches	8.1 inches
4	THICKNESS OF WALL	0.38 inch	0.5 inch
5	MATERIAL OF WALL	Steel	Steel
6	CONSTRUCTION OF BODY	The bomb body consists of the following: A streamlined steel casting or forging, threaded at the nose to take the nose adapter which holds the central exploder tube and at the other end of the casting is a threaded base plug through which the exploder tube passes; welded to the end of the casting is a streamlined section of thin metal, containing no explosive, but which is tapered to take the tail ring. The exploder passes through this section also.	
7	TYPE OF SUSPENSION	These bombs are suspended horizontally.	
8	CONSTRUCTION OF SUSPENSION LUG	The 50 lb. bomb has two U-shaped eyebolts attached to bomb case with screws. The eyebolts are 180 degrees removed and at right angles to each other. The 120 lb. bomb has only one eyebolt attached by cap screws.	
9	COLOR & MARKINGS ON BOMB AND TAIL	The bomb case and tail assembly are painted yellow; the bomb case having a green band around the largest diameter and a red band around the nose. If the filling is T.N.T., "Trotyl" is stencilled in three places on the green band or if Amatol is used, the fraction 80/20 appears in three places on the green band.	
10	LENGTH OF TAIL	15.7 inches	
11	WIDTH OF TAIL	5.9 inches	8.0 inches
12	MATERIAL OF TAIL	Mild steel	Mild steel
13	CONSTRUCTION OF TAIL	The tail is constructed of the following parts: A truncated cone which appears to be a casting, fits over rear section of bomb body and held to it by a lock nut over the exploder tube; three mild steel vanes are fastened to the cone and are reinforced by a cylinder rivetted to the vanes.	
14	WEIGHT OF TAIL		
15	TYPE OF FILLING	Two types of filling may be used: 1) Trotyl (T.N.T.) or; 2) 80/20 Amatol. The figures given below are for Mark I bombs only.	
16	WEIGHT OF FILLING	1) 9.3 lbs. 2) 11.8 lbs.	1) 25.0 lbs. 2) 32.0 lbs.
17	TOTAL WEIGHT OF BOMB	1) 45.3 lbs. 2) 47.8 lbs.	1) 113.0 lbs. 2) 120.0 lbs.
18	CHARGE / WEIGHT RATIO	1) 20.4 % 2) 24.3 %	1) 22.1 % 2) 26.6 %

COPY N..

BOMB DATA

FILE NO.: 1254.2

NATIONALITY: BRITISH	INFORMATION DATE: October 1942
SIZE: 250 lb. R.L. Mark I & II	TYPE: G.P.-H.E. Bomb
TARGET: General Bombardment.	FUZES: NOSE: D.A. No. 20 Mk. I, II or III D.A. No. 19 Mk. I or II TAIL: No. 5B Mk. I or II

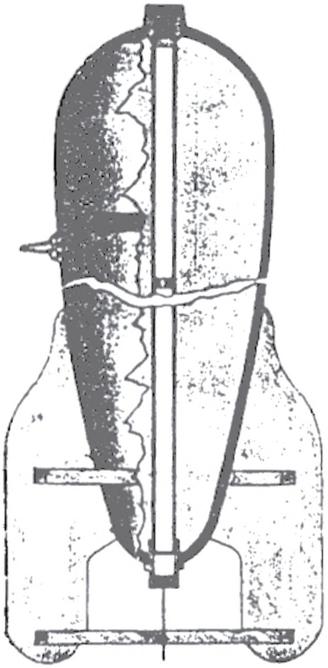

Mark I

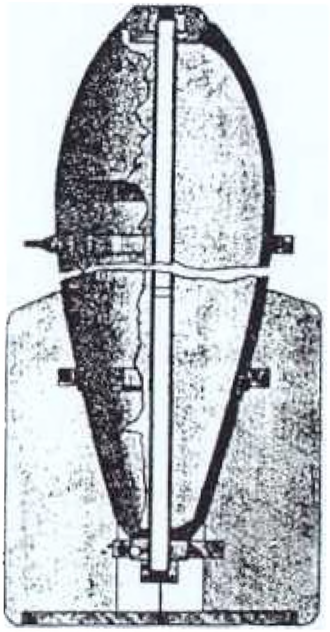

Mark II

COPY NO. [illegible]

BOMB DATA

FILE NO.: 1253.2

NATIONALITY: BRITISH	INFORMATION DATE: October 1942
SIZE: 112 lb. R.L. Mark V, VI & VII	TYPE: G.P.-H.E. Bomb
TARGET: General Bombardment.	FUZES: NOSE: D.A. No. 8 Mark I D.A. No. 19 Mark I or II TAIL: No. 58 Mark I or II

	DATA	112 lb. Mk. V	112 lb. Mk. VI	112 lb. Mk. VII
1	OVERALL LENGTH	29.1 inches	29.0 inches	28.9 inches
		25.0 inches	25.3 inches	25.1 inches
3	DIAMETER OF BODY	9.0 inches	9.0 inches	9.0 inches
4	THICKNESS OF WALL	0.55 inch	0.8 inch	0.6 inch
5	MATERIAL OF WALL	Steel	Iron	Steel
6	CONSTRUCTION OF BODY	The body of these bombs is a single-piece streamlined casting (steel for Mk. V & VII and cast iron for Mk. VI) threaded at the nose and tail to take adapters which hold the central exploder tube.		
7	TYPE OF SUSPENSION	These bombs are suspended horizontally.		
8	CONSTRUCTION OF SUSPENSION LUG	A U-shaped eyebolt is secured to the body at the center of gravity by cap screws.	Mk. VI and Mk. VII bombs have a U-shaped eyebolt fastened to a suspension band around the center of gravity.	
9	COLOR & MARKINGS ON BOMB AND TAIL	The bomb case and tail assembly are painted yellow; the bomb case having a green band around the largest diameter and a red band around the nose. If the filling is T.N.T., "Trotyl" is stencilled in three places on the green band or if Amatol is used, the fraction 80/20 appears in three places on the green band.		
10	LENGTH OF TAIL	11.0 inches	15.7 inches	15.7 inches
11	WIDTH OF TAIL	18.0 inches	18.0 inches	18.0 inches
12	MATERIAL OF TAIL	Mild steel.	Mild steel.	Mild steel.
13	CONSTRUCTION OF TAIL	The tail consists of four vanes which fit over the body and are fastened by screws. Two sets of box-type struts reinforce the vanes.	The tail of the Mk. VI and VII bombs consists of a cone which slides over the bomb body and is secured by a lock-nut on the exploder tube; four vanes are rivetted to the cone and are reinforced by two sets of box-type struts.	
14	WEIGHT OF TAIL			
15	TYPE OF FILLING	Two types of fillings may be used in these bombs: 1) Amatol, 80/20 filling or 2) T.N.T. filling.		
16	WEIGHT OF FILLING	1) 30.0 lbs. 2) 38.0 lbs.	1) 21.0 lbs.	1) 27.0 lbs.
17	TOTAL WEIGHT OF BOMB	1) 112.0 lbs. 2) 120.0 lbs.	1) 126.0 lbs.	1) 109.0 lbs.
18	CHARGE / WEIGHT RATIO	1) 26.8 % 2) 31.7 %	1) 16.7 %	1) 24.7 %

COPY N.

BOMB DATA

FILE NO.: 1254.1

NATIONALITY: BRITISH	INFORMATION DATE: October 1942
SIZE: R.F.C. 230 lb. Mark I, II, III	TYPE: G.P.-H.E. Bomb
TARGET: General Bombardment.	FUZES (Tail): No. 5B Mark I or II

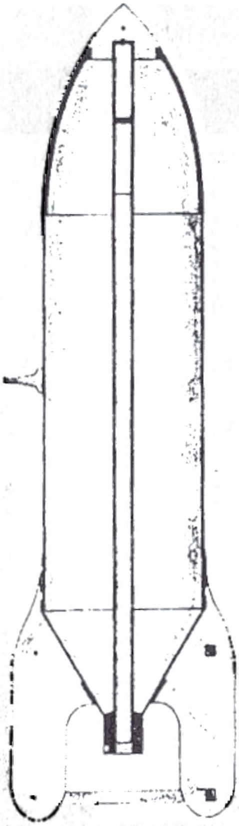

26 8

COPY NO. ___

BOMB DATA

FILE NO.: 1254.1

NATIONALITY: BRITISH	INFORMATION DATE: October 1942
SIZE: R.F.C. 230 lb. Mark I, II & III	TYPE: G.P. - H.E.
TARGET: General Bombardment	FUZES (Tail): No. 5B Mark I or II

	DATA	R.F.C. 230 lb. Mark I, II & III
1	OVERALL LENGTH	50.7 inches
2	LENGTH OF BODY	Approx. 46.0 inches
3	DIAMETER OF BODY	10.0 inches
4	THICKNESS OF WALL	.22 inch
5	MATERIAL OF WALL	Mild steel body with forged or cast steel nose.
6	CONSTRUCTION OF BODY	The body consists of a tubular case of mild steel to which has been welded a forged or cast steel nose section and a conical tail piece. In the Mark I and II there is a filling hole in the conical tail which is not present in the mark III. The Mark II has a solid point welded to the nose section whereas the Mark III has the steel nose point threaded to screw into the nose section and this acts as the filling hole. A fuze adapter is welded into the conical tail piece and holds the central booster tube.
7	TYPE OF SUSPENSION	These bombs are suspended horizontally.
8	CONSTRUCTION OF SUSPENSION LUG	An eyebolt which appears to be a U-shaped casting is rivetted to the bomb case at the center of gravity.
9	COLOR & MARKINGS ON BOMB AND TAIL	The bomb case and tail assembly are painted yellow; the bomb case having a green band around the largest diameter and a red band around the nose. If the filling is T.N.T., "Trotyl" is stencilled in three places on the green band or, if Amatol is used, the fraction 80/20 appears in three places on the green band.
10	LENGTH OF TAIL	18.0 inches
11	WIDTH OF TAIL	19.5 inches
12	MATERIAL OF TAIL	Mild steel.
13	CONSTRUCTION OF TAIL	The tail consists of a cone which fits over conical tail section of the body; four mild steel vanes, reinforced with two sets of box-type struts, are secured to the body by two clamping bands and bolts.
14	WEIGHT OF TAIL	
15	TYPE OF FILLING	Two types of filling are used in this bomb: 1) Amatol 80/20 or 2) Trotyl (T.N.T.)
16	WEIGHT OF FILLING	1) 110 lbs. 2) 140 lbs.
17	TOTAL WEIGHT OF BOMB	1) 210 lbs. 2) 240 lbs.
18	CHARGE / WEIGHT RATIO	1) 52.5 % 2) 58.5 %

COPY NO.____________

BOMB DATA

FILE NO.: 1254.4

NATIONALITY: BRITISH	INFORMATION DATE: October 1942
SIZE: 250 lb. Mark IV 500 lb. Mark IV	TYPE: G.P.-H.E. Bomb
TARGET: General Bombardment.	FUZES: NOSE: Pistol No. 27 Mark I TAIL: Pistol No. 28 Mark I

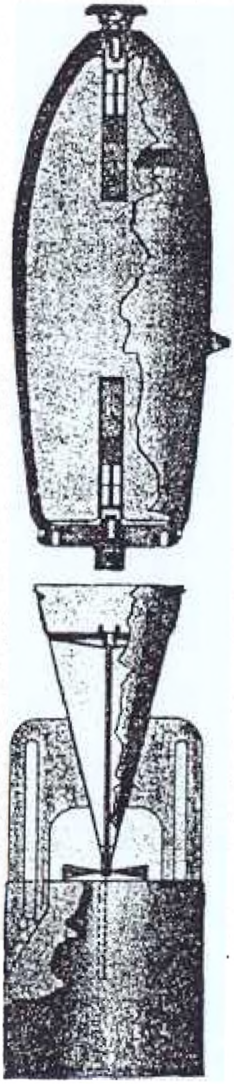

2638

COPY NO.

BOMB DATA

FILE NO.: 1254.2

NATIONALITY: BRITISH	INFORMATION DATE: October 1942
SIZE: 250 lb. R.L. Mark I & II	TYPE: G.P.-H.E. Bomb
TARGET: General Bombardment.	FUZES: NOSE: D.A. No. 20 Mk. I, II or III; D.A. No. 19 Mk. I or II. TAIL: No. 5B Mk. I or II

	DATA	Mark I	Mark II
1	OVERALL LENGTH	36.3 inches	35.0 inches
2	LENGTH OF BODY	31.0 inches	30.5 inches
3	DIAMETER OF BODY	12.5 inches	12.5 inches
4	THICKNESS OF WALL		
5	MATERIAL OF WALL	Steel	Steel
6	CONSTRUCTION OF BODY	The body of these bombs is a streamlined, single-piece, steel casting, threaded at nose and tail to receive the adapters which hold the central exploder tube.	
7	TYPE OF SUSPENSION	These bombs are suspended horizontally.	
8	CONSTRUCTION OF SUSPENSION LUG	A U-shaped eyebolt is secured to the body at the center of gravity by cap screws.	A U-shaped eyebolt is fastened to a suspension band around the center of gravity.
9	COLOR & MARKINGS ON BOMB AND TAIL	The bomb case and tail assembly are painted yellow; the bomb case having a green band around the largest diameter and a red band around the nose. If the filling is T.N.T., "Trotyl" is stencilled in three places on the green band or if Amatol is used, the fraction 80/20 appears in three places on the green band.	
10	LENGTH OF TAIL	19.7 inches	19.0 inches
11	WIDTH OF TAIL	18.0 inches	18.0 inches
12	MATERIAL OF TAIL	Mild steel.	Mild steel.
13	CONSTRUCTION OF TAIL	The tail consists of four vanes which fit over the body and are fastened by screws. Two sets of box-type struts reinforce the vanes.	The tail consists of four vanes secured by two clamping bands and bolts. The vanes are reinforced by two sets of box-type struts.
14	WEIGHT OF TAIL		
15	TYPE OF FILLING	Two types of filling may be used: 1) Trotyl (T.N.T.) or 2) 80/20 Amatol.	
16	WEIGHT OF FILLING	1) 86.0 lbs. 2) 112.0 lbs.	1) 86.0 lbs.
17	TOTAL WEIGHT OF BOMB	1) 225.0 lbs. 2) 251.0 lbs.	1) 255.0 lbs.
18	CHARGE / WEIGHT RATIO	1) 38.0 % 2) 44.5 %	1) 33.8 %

BOMB DATA

COPY NO. —
FILE NO.: 1254.3

NATIONALITY: BRITISH	INFORMATION DATE: October 1942
SIZE: 250 lb. Mark I 500 lb. Mark I	TYPE: G.P.-H.E. Bomb
TARGET: General Bombardment.	FUZES: NOSE: D.A. No. 19 Mk. I or II TAIL: No. 22 Mk. I or II

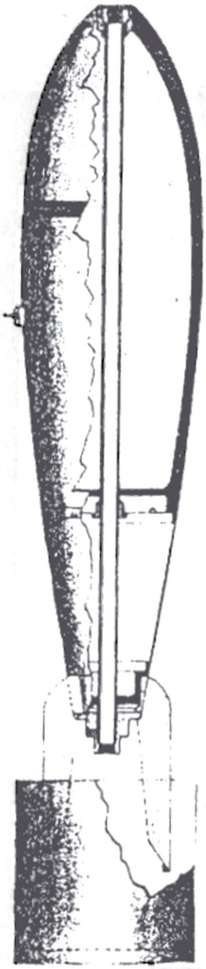

COPY NO. 2638

BOMB DATA

FILE NO.: 1254.3

NATIONALITY: BRITISH	INFORMATION DATE: October 1942
SIZE: 250 lb. Mark I 500 lb. Mark I	TYPE: G.P. - H.E.
TARGET: General Bombardment	FUZES: NOSE: D.A. No. 19 Mk. I or II TAIL: No. 22 Mk. I or II

	DATA	250 lb. Mark I	500 lb. Mark I
1	OVERALL LENGTH	54.1 inches	68.7 inches
2	LENGTH OF BODY	28.0 inches	35.7 inches
3	DIAMETER OF BODY	10.2 inches	12.9 inches
4	THICKNESS OF WALL	.6 inch	7/8 inch
5	MATERIAL OF WALL	Steel	Steel
6	CONSTRUCTION OF BODY	The bomb body consists of the following: a streamlined steel casting or forging, threaded at the nose to take the nose adapter which holds the central exploder tube and at the other end of the casting is a threaded base plug through which the exploder tube passes; welded to the end of the casting is a streamlined section of thin metal, containing no explosive, but which is tapered to take the tail ring. The exploder passes through this section also.	
7	TYPE OF SUSPENSION	These bombs are suspended horizontally.	
8	CONSTRUCTION OF SUSPENSION LUG	U-shaped eyebolt is attached to body at center of gravity by cap screws.	
9	COLOR & MARKINGS ON BOMB AND TAIL	The bomb case and tail assembly are painted yellow; the bomb case having a green band around the largest diameter and a red band around the nose. If the filling is T.N.T., "Trotyl" is stencilled in three places on the green band or if Amatol is used the fraction 80/20 appears in three places on the green band.	
10	LENGTH OF TAIL		
11	WIDTH OF TAIL	10.2 inches	12.9 inches
12	MATERIAL OF TAIL	Mild steel	Mild steel
13	CONSTRUCTION OF TAIL	The tail is constructed of the following parts: a truncated cone which appears to be a casting, fits over rear section of bomb body and held to it by a lock nut over the exploder tube; four mild steel vanes are fastened to the cone and are reinforced by a cylinder rivetted to the vanes.	
14	WEIGHT OF TAIL		
15	TYPE OF FILLING	Two types of filling may be used: 1) Trotyl (T.N.T.) or; 2) 80/20 Amatol	
16	WEIGHT OF FILLING	1) 67 lbs. 2) 54 lbs.	1) 142 lbs. 2) 112 lbs.
17	TOTAL WEIGHT OF BOMB	1) 247 lbs. 2) 234 lbs.	1) 508 lbs. 2) 478 lbs.
18	CHARGE / WEIGHT RATIO	1) 27 % 2) 23 %	1) 28 % 2) [illegible]

COPY NO.

BOMB DATA

FILE NO.: 1255.1

NATIONALITY: BRITISH	INFORMATION DATE: October 1942
SIZE: R.A.F. 550 lb. Mk. I R.L. 550 lb. Mk. I	TYPE: G.P.-H.E. Bomb
TARGET: General Bombardment.	FUZES: R.A.F. (Nose): D.A. No. 8 Mk. I, D.A. No. 19 Mark I or II R.L. (Nose): D.A. No. 9 Mk. I, D.A. No. 20 Mark I, II or III Both (Tail): No. 5B Mark I or II

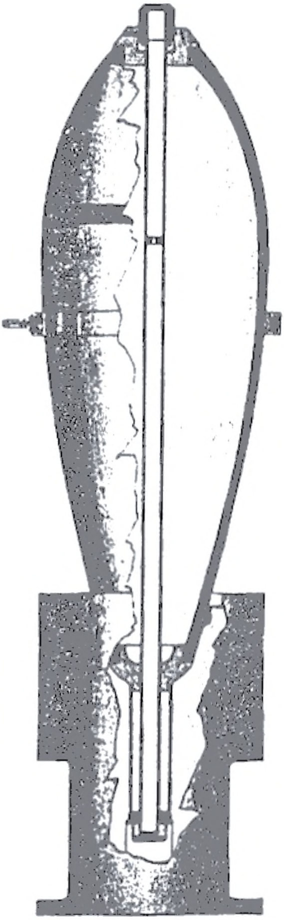

R.A.F. 550 lb. Mark I

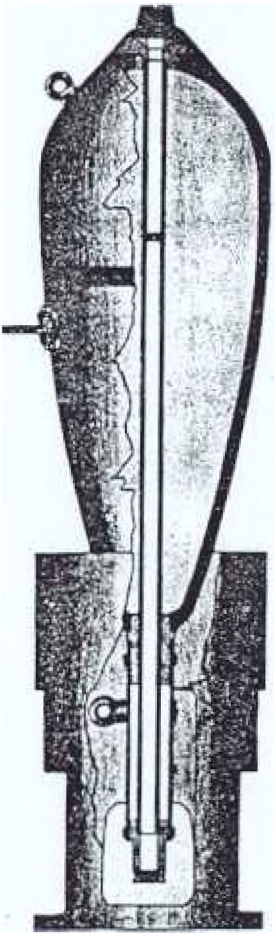

R.L. 550 lb. Mark I

COPY NO. 638

BOMB DATA

FILE NO.: 1254.4

NATIONALITY: BRITISH		INFORMATION DATE: October 1942
SIZE: 250 lb. Mark IV 500 lb. Mark IV		TYPE: G.P. - H.E. Bomb
TARGET: General Bombardment		FUZES: NOSE: Pistol No. 27 Mark I TAIL: Pistol No. 28 Mark I

	DATA	250 lb. Mark IV	500 lb. Mark IV
1	OVERALL LENGTH	56.0 inches	70.6 inches
2	LENGTH OF BODY	28.3 inches	37.2 inches
3	DIAMETER OF BODY	10.2 inches	12.9 inches
4	THICKNESS OF WALL		
5	MATERIAL OF WALL	Steel	Steel
6	CONSTRUCTION OF BODY	The body of these bombs is a streamlined steel casting or forging with threaded nose and tail adapters which hold the exploder tubes (not a complete tube as in other G.P. Mk. Series bombs).	
7	TYPE OF SUSPENSION	These bombs are suspended horizontally.	
8	CONSTRUCTION OF SUSPENSION LUG	Eyebolt at center of gravity of bomb, attached with cap screws.	
9	COLOR & MARKINGS ON BOMB AND TAIL	The body and tail assembly is painted yellow with a green band at the largest diameter, and a red band around the nose. The symbols "Amatol 60/40" may be stencilled in three places below the green band.	
10	LENGTH OF TAIL	27.7 inches	33.4 inches
11	WIDTH OF TAIL	10.2 inches	12.9 inches
12	MATERIAL OF TAIL	Mild steel	Mild steel
13	CONSTRUCTION OF TAIL	The tail assembly consists of: a cone which fits over the base plate and is secured to it by four spring clips; four vanes rivetted to the cone; and a cylinder rivetted to the vanes.	
14	WEIGHT OF TAIL	9.0 lbs.	16.0 lbs.
15	TYPE OF FILLING	The filling of these bombs is Amatol 60/40.	
16	WEIGHT OF FILLING	67.0 lbs.	143.0 lbs.
17	TOTAL WEIGHT OF BOMB	217.0 lbs.	439.0 lbs.
18	CHARGE / WEIGHT RATIO	30 %	34 %

COPY NO.________

BOMB DATA

FILE NO.: 1254.5

NATIONALITY: BRITISH	INFORMATION DATE: October 1942
SIZE: R.A.F. 500 lb. Mk. I R.L. 520 lb. Mk. I	TYPE: G.P.-H.E. (Light Case)
TARGET: General Bombardment.	FUZES: R.A.F. (Nose): D.A. No. 8 Mk. I, D.A. No. 19 Mk. I or II R.L. (Nose): D.A. No. 9 Mk. I, D.A. No. 20 Mk. I, II or III Both (Tail): No. 5B Mk. I or II

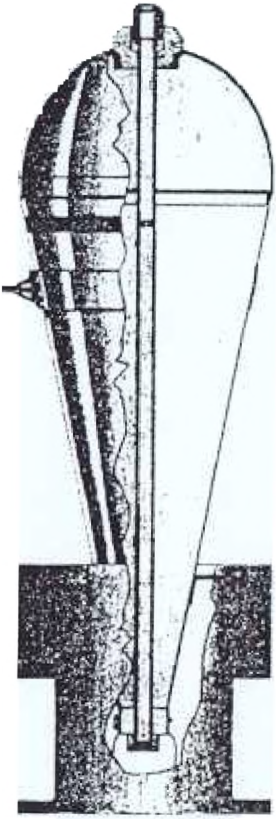

R.L. 520 lb. Mark I

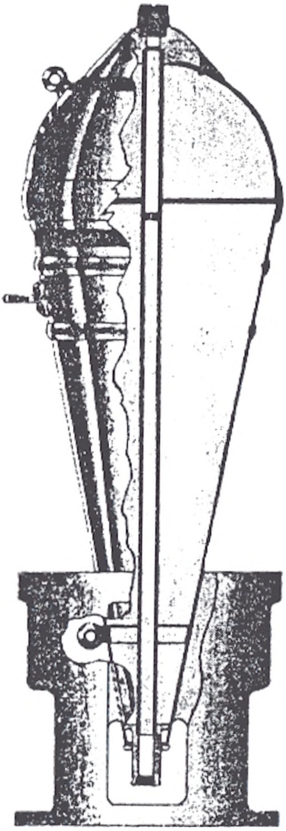

R.A.F. 500 lb. Mark I

COPY NO. ______________

BOMB DATA FILE NO.: 1254.5

NATIONALITY: BRITISH	INFORMATION DATE: October 1942
SIZE: R.A.F. 500 lb. Mk. I R.L. 520 lb. Mk. I	TYPE: G.P.-H.E. (Light Case)
TARGET: General Bombardment.	FUZES: R.A.F. (Nose): D.A. No. 8 Mk. I, D.A. No. 19 Mk. I or II R.L. (Nose): D.A. No. 9 Mk. I, D.A. No. 20 Mk. I, II or III Both (Tail): No. 5B Mk. I or II

	DATA	R.A.F. 500 lb. Mk. I	R.L. 520 lb. Mk. I
1	OVERALL LENGTH	61.1 inches	60.7 inches
		55.0 inches	54.0 inches
		19.0 inches	19.6 inches
		0.15 inch	0.25 inch
		Mild steel.	Mild steel.
		The bomb cases of these types are very similar, consisting of: 1) A hemi-spherical nose section which in the R.L. Mark I has a cast steel nose-reinforcing piece attached by screws welded to a 2) Conical body section which in the R.L. Mark I has welded reinforcing around the nose-to-body weld and on each side of the suspension eyebolt. There is a central exploder tube held in place by the nose (or nosepiece) and tail adapters.	
7	TYPE OF SUSPENSION	These bombs are suspended horizontally.	
8	CONSTRUCTION OF SUSPENSION LUG	A U-shaped suspension eyebolt is attached to the body near the center of gravity by rivets (R.A.F.) or bolts (R.L.) and also to a band which is welded to the bomb body.	
9	COLOR & MARKINGS ON BOMB AND TAIL	The bomb case and tail assembly are painted yellow; the bomb case having a green band around the largest diameter and a red band around the nose. If the filling is T.N.T., "Trotyl" is stencilled in three places on the green band or if Amatol is used, the fraction "80/20" appears in three places on the green band.	
10	LENGTH OF TAIL	19.0 inches	18.5 inches
11	WIDTH OF TAIL	19.0 inches	19.6 inches
	MATERIAL OF TAIL	Mild steel.	Mild steel.
13	CONSTRUCTION OF TAIL	The tail assemblies for these are very similar, differing only in profile of tail cylinder and in the method of attaching assembly to bomb case. The tail consists of four vanes attached to a clamping band (R.A.F. Mk.) or rivetted to the tail adapter; a cylinder around the vanes, the cylinder having cut-out sections; and stiffening rings at top and bottom of cylinder.	
14	WEIGHT OF TAIL		
15	TYPE OF FILLING	Two types of fillings may be used in these bombs: 1) Amatol, 80/20 filling or; 2) T.N.T. filling.	
16	WEIGHT OF FILLING	1) 280.0 lbs. 2) 356.0 lbs.	1) 273.0 lbs. 2) 354.0 lbs.
17	TOTAL WEIGHT OF BOMB	1) 460.0 lbs. 2) 536.0 lbs.	1) 453.0 lbs. 2) 534.0 lbs.
18	CHARGE / WEIGHT RATIO	1) 61.0 % 2) 66.5 %	1) 60.0 % 2) 66.5 %

COPY NO. 2658

BOMB DATA

FILE NO.: 1255.1

NATIONALITY: BRITISH	INFORMATION DATE: October 1942
SIZE: R.A.F. 550 lb. Mk. I R.L. 550 lb. Mk. I	TYPE: G.P.-H.E. Bomb
TARGET: General Bombardment.	FUZES: R.A.F. (Nose): D.A. No. 8 Mk. I D.A. No. 19 Mark I or II R.L. (Nose): D.A. No. 9 Mk. I D.A. No. 20 Mk. I, II or III Both (Tail): No. 5B Mark I or II

	DATA	R.A.F. Mark I	R.L. Mark I
1	OVERALL LENGTH	61.1 inches	60.8 inches
2	LENGTH OF BODY	46.5 inches	42.0 inches
3	DIAMETER OF BODY	15.0 inches	15.0 inches
4	THICKNESS OF WALL	0.9 inch	0.9 inch
5	MATERIAL OF WALL	Steel	Steel
6	CONSTRUCTION OF BODY	Bomb body is constructed of a streamlined single-piece, steel casting threaded at the nose and tail to receive the adapters which hold the central exploder tube in position.	
7	TYPE OF SUSPENSION	These bombs are always suspended horizontally.	
8	CONSTRUCTION OF SUSPENSION LUG	A U-shaped eyebolt is rivetted to a suspension band passing around the body of the bomb.	A U-shaped eyebolt is attached to the body near the center of gravity by four cap screws or bolts.
9	COLOR & MARKINGS ON BOMB AND TAIL	The bomb case and tail assembly are painted yellow; the bomb case having a green band around the largest diameter and a red band around the nose. If the filling is T.N.T., "Trotyl" is stencilled in three places on the green band or if Amatol is used, the fraction "80/20" appears in three places on the green band.	
10	LENGTH OF TAIL	21.0 inches	24.0 inches
		15.0 inches	15.0 inches
12	MATERIAL OF TAIL	Mild steel.	Mild steel.
13	CONSTRUCTION OF TAIL	The tail assemblies for these are very similar, differing only in profile of tail cylinder and in the method of attaching assembly to bomb case. The tail consists of four vanes attached to a clamping band (R.A.F. Mk.) or rivetted to the tail adapter; a cylinder around the vanes, the cylinder having cut-out sections; and stiffening rings at top and bottom of cylinder.	
14	WEIGHT OF TAIL		
15	TYPE OF FILLING	Two types of filling may be used in these bombs: 1) Amatol, 80/20, filling or 2) T.N.T. filling.	
16	WEIGHT OF FILLING	1) 157.0 lbs. 2) 200.0 lbs.	
17	TOTAL WEIGHT OF BOMB	1) 523.0 lbs. 2) 566.0 lbs.	
18	CHARGE / WEIGHT RATIO	1) 30.0 % 2) 35.4 %	

COPY NO.

BOMB DATA FILE NO.: 1256.1

NATIONALITY: BRITISH	INFORMATION DATE: October 1942
SIZE: S.N. 1400 lb. Mark II	TYPE: G.P.-H.E. (Light case)
TARGET: General bombardment on targets where large blast damage is desirable.	FUZES: NOSE: D.A. No. 13 Mk. I TAIL: No. 12 Mk. I

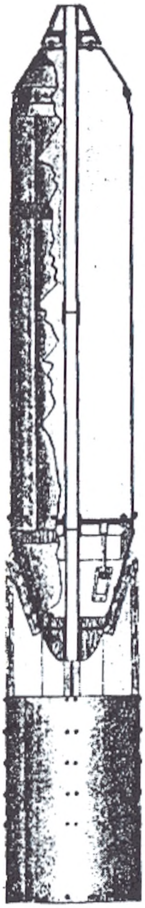

COPY NO. 38

BOMB DATA

FILE NO.: 1256.1

NATIONALITY: BRITISH	INFORMATION DATE: October 1942
SIZE: S.N. 1400 lb. Mark II	TYPE: G.P.-H.E. (Light case)
TARGET: General bombardment on targets where large blast damage is desirable.	FUZES: NOSE: D.A. No. 13 Mk. I TAIL: No. 12 Mk. I

	DATA	S.N. 1400 lb. Mark II
1	OVERALL LENGTH	133.1 inches
2	LENGTH OF BODY	93.0 inches
3	DIAMETER OF BODY	18.5 inches
4	THICKNESS OF WALL	0.51 inches
5	MATERIAL OF WALL	Mild steel.
6	CONSTRUCTION OF BODY	The body of this bomb is constructed of steel plate, the cylindrical body being rivetted longitudinally with four rows of large rivets (two rows on each side). The conical nose section of pressed steel is rivetted to the body and a conical nose adapter is rivetted to the nose section. A flat, male base plate is rivetted to the rear of the body. This bomb is of distinctive construction and is easily recognized.
7	TYPE OF SUSPENSION	The bomb is suspended horizontally.
8	CONSTRUCTION OF SUSPENSION LUG	
9	COLOR & MARKINGS ON BOMB AND TAIL	The body and tail assembly are painted yellow with a green band just forward of the suspension lug and a red band around the nose. The markings "Amatol 70/30" or "Amatol 80/20" may be found stencilled in three places just below the green band.
10	LENGTH OF TAIL	49.0 inches
11	WIDTH OF TAIL	20.0 inches
12	MATERIAL OF TAIL	Mild steel.
13	CONSTRUCTION OF TAIL	The tail assembly consists of: A cone with a rounded apex held to the base plate by four bolts; four vanes are rivetted to the cone and a reinforcing cylinder is rivetted to the cone.
14	WEIGHT OF TAIL	
15	TYPE OF FILLING	Two fillings may be used in this bomb: 1) Amatol 70/30 or 2) Amatol 80/20.
16	WEIGHT OF FILLING	1) 750.0 lbs. 2) 709.0 lbs.
17	TOTAL WEIGHT OF BOMB	1) 1474.0 lbs. 2) 1433.0 lbs.
18	CHARGE / WEIGHT RATIO	1) 51.0 % 2) 49.5 %

COPY NO.-
BOMB DATA FILE NO.: 1276.1

NATIONALITY: BRITISH	INFORMATION DATE: October 1942
SIZE: 450 lb. Mark II 2000 lb. Mark I	TYPE: A.P.-H.E. Bomb
TARGET: Armor-plated objects such as battleships and other heavy naval craft; reinforced concrete and heavy street construction.	FUZES: (Tail) 450 lb. - No. 34 Mk. I 2000 lb. - No. 37 Mk. I

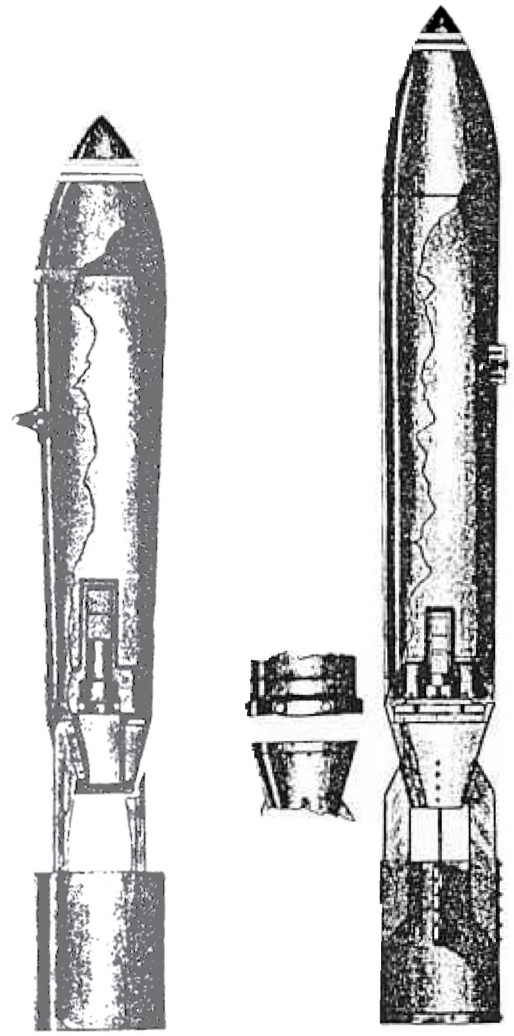

450 lb. Mark II   2000 lb. Mark I

COPY NO.
BOMB DATA FILE NO.: 1256.2

NATIONALITY: BRITISH	October 1942
SIZE: 1000 lb. Mark II 1900 lb. Mark II	TYPE: G.P. - H.E.

These bombs have been reported but little information is now available. The fuse may be placed in the nose (for instantaneous action) or in the tail (for delayed action). The usual delay for the fuse in the tail is 1/40th of a second.

	DATA	1000 lb. Mk. II	
1	OVERALL LENGTH	86.8 inches	101.0 inches
2	DIAMETER OF BODY	16.2 inches	18.7 inches
3	CONSTRUCTION OF BODY	Cast or forged steel body.	Cast or forged steel body.
4	WEIGHT OF TAIL	37.0 lbs.	43.0 lbs.
5	TYPE OF FILLING	Amatol 60/40	
6	WEIGHT OF FILLING	360.0 lbs.	
7	WEIGHT OF CASE	650.0 lbs.	1215.0 lbs.
8	TOTAL WEIGHT OF BOMB	1010.0 lbs.	1900.0 lbs.
9	CHARGE / WEIGHT RATIO	36.0 %	

BOMB DATA	
NATIONALITY: BRITISH	INFORMATION DATE: October 1942
SIZE: 2000 lb. 4000 lb. 8000 lb.	TYPE: G.P. - H.E. (High capacity)
TARGETS: Targets of large area where high blast damage is desired.	FUZES: Three impact fuzes in nose; Two side fuze pockets for delayed-action fuse.

	DATA	2000 lb.	4000 lb.	8000 lb.
1	OVERALL LENGTH		110.0 inches	133.5 inches
2	DIAMETER OF BODY	18.45 inches	30.0 inches	
3	TYPE OF FILLING	Amatol 60/40	Amatol 60/40	
4	WEIGHT OF FILLING	1340.0 lbs.	2960.0 lbs.	
5	TOTAL WEIGHT OF BOMB		3920.0 lbs.	
6	CHARGE / WEIGHT RATIO	73.0 %	75.0 %	

NOTE: While it has been considered necessary to limit the striking velocity of these bombs by the use of parachutes, the Air Staff disapproves of parachutes and they will probably not be adopted.

BOMB DATA

COPY NO.-

FILE NO.: 1264.1

NATIONALITY: BRITISH	INFORMATION DATE: October 1942
SIZE: 250 lb. Mark II 250 lb. Mark V 500 lb. Mark II 500 lb. Mark V	TYPE: S.A.P.-H.E. Bomb
TARGET: Naval seacraft, reinforced concrete or steel construction.	FUZES: (Tail) Mk.II 250 lb. No. 30 Mk. I 500 lb. No. 31 Mk. I Mk. V Bombs - No. 28 Mk. I

250 lb. Mark II

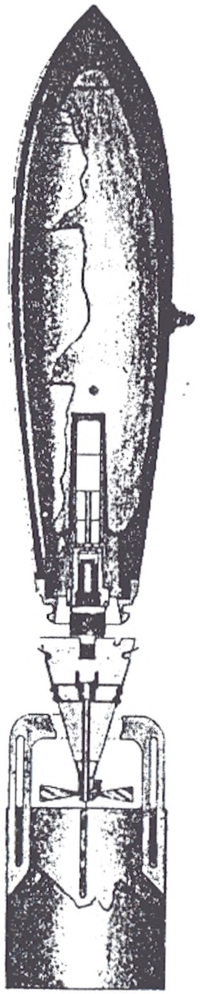

500 lb. Mark V

COPY NO. v 3 8

BOMB DATA

FILE NO.: 1264.1

NATIONALITY: BRITISH	INFORMATION DATE: October 1942
SIZE: 250 lb. Mark II 250 lb. Mark V 500 lb. Mark II 500 lb. Mark V	TYPE: S.A.P.-H.E. Bomb
TARGET: Naval seacraft, reinforced concrete or steel construction.	FUZES: (Tail) Mk.II 250 lb. No. 30 Mk. I 500 lb. No. 31 Mk. I Mk. V Bombs - No. 28 Mk. I

	DATA	Mark II		Mark V	
		250 lb.	500 lb.	250 lb.	500 lb.
1	OVERALL LENGTH	49.5"	62.2"	49.3"	62.0"
2	LENGTH OF BODY	32.0"	40.0"	31.3"	41.6"
3	DIAMETER OF BODY	9.2"	11.5"	9.2"	11.5"
4	THICKNESS OF WALL				
5	MATERIAL OF WALL	Steel	Steel	Steel	Steel
6	CONSTRUCTION OF BODY	The body of these bombs is a streamlined, steel casting or forging with a tail adapter screwed into the rear of the bomb case to hold the exploder tube.			
7	TYPE OF SUSPENSION	These bombs are suspended horizontally.			
8	CONSTRUCTION OF SUSPENSION LUG	A U-shaped eyebolt is fastened to the bomb body by four cap screws in a position near the center of gravity.			
9	COLOR & MARKINGS ON BOMB AND TAIL	The bomb body and tail are painted yellow. There is a green band around the body at the greatest diameter with a red and a white band around the nose. The word "Trotyl" (T.N.T.) will be found stencilled in three places below green band.			
10	LENGTH OF TAIL			18.1"	20.4"
11	WIDTH OF TAIL	9.2"	11.5"	9.2"	11.5"
12	MATERIAL OF TAIL	Mild steel and cast steel.			
13	CONSTRUCTION OF TAIL	The tail assembly consists of: A cast steel locking ring fastened to the rear of the body; four vanes of mild steel reinforced by a steel cylinder rivetted to the vanes.		The tail assembly consists of: A mild steel cone fastened to body by four spring clips; four vanes rivetted to the cone and a steel cylinder rivetted to the vanes.	
14	WEIGHT OF TAIL				
15	TYPE OF FILLING	The filling of these bombs is normally Trotyl (T.N.T.).			
16	WEIGHT OF FILLING	47.0 lbs.	92.0 lbs.		
17	TOTAL WEIGHT OF BOMB	239.0 lbs.	479.0 lbs.		
18	CHARGE / WEIGHT RATIO	19.7 %	19.2 %		

COPY NO.

BOMB DATA FILE NO.: 1284.2

NATIONALITY: BRITISH	INFORMATION DATE: October 1942
SIZE: 100 lb. Mark IV 250 lb. Mark IV 500 lb. Mark IV	TYPE: Anti-submarine - H.E. Bomb
TARGET: Used against submarines	FUZES (Tail): No. 30 Mark II or III

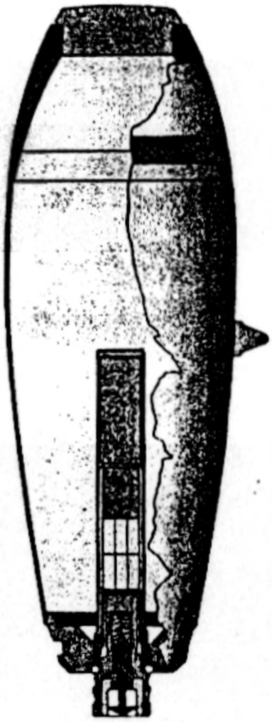

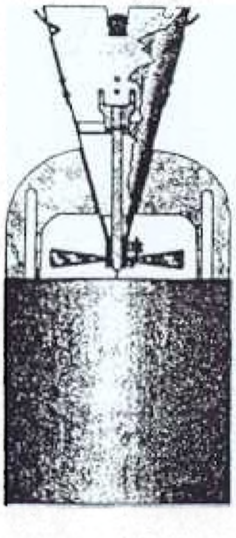

COPY NO. 263 u

BOMB DATA

FILE NO.: 1276.1

NATIONALITY: BRITISH	INFORMATION DATE: October 1942
SIZE: 450 lb. Mark II 2000 lb. Mark I	TYPE: A.P. - H.E.
TARGET: Armor-plated objects such as battleships and other heavy naval craft; reinforced concrete and heavy street construction.	FUZES: (Tail) 450 lb. - No. 34 Mk. I 2000 lb. - No. 37 Mk. I

	DATA	450 lb. Mark II	2000 lb. Mark I
1	OVERALL LENGTH	65.2 inches	112.7 inches
2	LENGTH OF BODY	43.0 inches	79.5 inches
3	DIAMETER OF BODY	9.2 inches	13.5 inches
4	THICKNESS OF WALL	1.6 inches	Approx. 2.0 inches
5	MATERIAL OF WALL	Steel	Steel
6	CONSTRUCTION OF BODY	These bombs are constructed of very heavy, slightly streamlined steel forgings. A cast steel tail adapter is screwed into the rear of the bomb to hold the fuze and exploder tube.	
7	TYPE OF SUSPENSION	These bombs are suspended horizontally.	
8	CONSTRUCTION OF SUSPENSION LUG	A heavy U-shaped eyebolt is attached to the bomb case by six stud bolts.	
9	COLOR & MARKINGS ON BOMB AND TAIL	The body and tail assembly are painted yellow with a green band around the largest diameter and a white band on each side of a red band around the nose. The 450 lb. bomb may have the word "Trotyl" stencilled in three places below the green band.	
10	LENGTH OF TAIL		34.7 inches
11	WIDTH OF TAIL	9.2 inches	13.5 inches
12	MATERIAL OF TAIL	Aluminum alloy	Aluminum alloy
13	CONSTRUCTION OF TAIL	The tail assembly consists of: A truncated cone held to the bomb body by a locking nut on the tail adapter; four vanes are rivetted to the cone and a reinforcing cylinder is rivetted to the vanes.	
14	WEIGHT OF TAIL		
15	TYPE OF FILLING	Filling is Trotyl (T.N.T.)	The filling of this bomb is Shellite (a mixture of picric acid and dinitrobenzene).
16	WEIGHT OF FILLING	46.0 lbs.	167.0 lbs.
17	TOTAL WEIGHT OF BOMB	427.0 lbs.	2000.0 lbs.
18	CHARGE /WEIGHT RATIO	11.0 %	8.0 %

BOMB DATA

COPY NO.—
FILE NO.: 1284.1

NATIONALITY: BRITISH	INFORMATION DATE: October 1942
SIZE: 100 lb. Mark I & III 250 lb. Mark I & III 500 lb. Mark I & III	TYPE: Anti-submarine - H.E.
TARGET: Used against submarines or other under-water targets.	FUZES (Tail only): No. 32 Mark I

COPY NO.

BOMB DATA FILE NO.: 1284.1

NATIONALITY: BRITISH

INFORMATION DATE: October 1942

SIZE: 100 lb. Mark I & III
250 lb. Mark I & III
500 lb. Mark I & III

TYPE: Anti-submarine - H.E.

TARGET: Used against submarines or other under-water targets.

FUZES (Tail only): No. 32 Mark I

	DATA	100 lb.		250 lb.		500 lb.	
		Mk. I	Mk. III	Mk. I	Mk. III	Mk. I	Mk. III
1	OVERALL LENGTH	42.2"	43.0"	58.4"	59.5"	74.5"	76.5"
2	LENGTH OF BODY	30.0"		43.1"		53.5"	
3	DIAMETER OF BODY	8.1"	8.2"	11.1"	11.2"	14.1"	14.3"
4	THICKNESS OF WALL						
5	MATERIAL OF WALL	All of these bomb cases are made of steel.					
6	CONSTRUCTION OF BODY	The construction of these bombs is very similar and the body consists of the following: A forged or cast steel nose section threaded to take the nose adapter and welded to thin, mild steel plate body to which is welded a cast steel base plate. The entire body is streamlined. The thin portion of the body, in the Mk. I bombs, has three interior strengthening rings, one of which is around the center of gravity.					
7	TYPE OF SUSPENSION	These bombs are suspended horizontally.					
8	CONSTRUCTION OF SUSPENSION LUG	Both the Mk. I and Mk. III bombs have a U-shaped eyebolt secured to the case at the center of gravity (over one of the strengthening rings) by cap screws.					
9	COLOR & MARKINGS ON BOMB AND TAIL	The body and tail of this bomb are painted yellow, the body having a green band around the largest diameter and a red band around the nose. If the filling used is Trotyl (T.N.T.) this (Trotyl) will appear stencilled on the body below the green band in three places. If the filling is Baratol 10/90, the symbols "Bar 10/90" will replace the above.					
10	LENGTH OF TAIL						
11	WIDTH OF TAIL	8.1"	8.2"	11.0"	11.2"	14.0"	14.3"
12	MATERIAL OF TAIL	The tail assembly is made of mild steel.					
13	CONSTRUCTION OF TAIL	The tail consists of: Cast iron truncated cone secured to the base plate by a bolt; four vanes are welded or rivetted to the cone and a cylinder is rivetted to the vanes.					
14	WEIGHT OF TAIL						
15	TYPE OF FILLING	Two types of filling may be used: 1) T.N.T.; or 2) Baratol 10/90 (a mechanical mixture of T.N.T. and Barium Nitrate).					
16	WEIGHT OF FILLING	1) 50.0 lbs. 2) 53.0 lbs.		1) 126.0 lbs. 2) 131.0 lbs.		1) 256.0 lbs. 2) 265.0 lbs.	
17	TOTAL WEIGHT OF BOMB	1) 91.0 lbs. 2) 97.0 lbs.		1) 237.0 lbs. 2) 242.0 lbs.		1) 475.0 lbs. 2) 485.0 lbs.	
18	CHARGE / WEIGHT RATIO	55.0 %		54.0 %		54.0 %	

COPY NO. 2638

BOMB DATA FILE NO. 1284.2

NATIONALITY: BRITISH	INFORMATION DATE: October 1942
SIZE: 100 lb. Mark IV 250 lb. Mark IV 500 lb. Mark IV	TYPE: Anti-submarine - H.E. Bomb
TARGET: Used against submarines.	FUZES (Tail): No. 30 Mark II or III

	DATA	100 lb. Mark IV	250 lb. Mark IV	500 lb. Mark IV
1	OVERALL LENGTH	41.05 inches	57.65 inches	72.46 inches
2	LENGTH OF BODY	23.15 inches	34.30 inches	43.27 inches
3	DIAMETER OF BODY	8.05 inches	11.35 inches	14.30 inches
4	THICKNESS OF WALL			
5	MATERIAL OF WALL	Steel.	Steel.	Steel.
6	CONSTRUCTION OF BODY	The bodies of these bombs are identical except for dimensions. The body consists of: A streamlined, steel casting or forging to which a flat, cast steel nose plug is threaded; a cast or forged steel base plate is welded to the rear of the body and is threaded to take the central exploder tube.		
7	TYPE OF SUSPENSION	These bombs are suspended horizontally.		
8	CONSTRUCTION OF SUSPENSION LUG	The eyebolt is U-shaped and attached to the body, at the center of gravity, by four screws. A plate under the eyebolt (inside the case) reinforces the body at this point.		
9	COLOR & MARKINGS ON BOMB AND TAIL	The body and tail assembly are painted yellow with a green band around greatest diameter of the body and a red band around the nose. The word "Trotyl" (T.N.T.) is stencilled in three places below the green band.		
10	LENGTH OF TAIL	17.9 inches	23.4 inches	24.2 inches
11	WIDTH OF TAIL	8.0 inches	11.4 inches	14.2 inches
12	MATERIAL OF TAIL	Mild steel.	Mild steel.	Mild steel.
13	CONSTRUCTION OF TAIL	The tail assembly consists of: A cone which fits over the base plate and is secured to it by four spring clips; four vanes rivetted to the cone; and a cylinder rivetted to the vanes.		
14	WEIGHT OF TAIL	7.5 lbs.	10.0 lbs.	
15	TYPE OF FILLING	The filling of these bombs is Trotyl (T.N.T.)		
16	WEIGHT OF FILLING	44.0 lbs.	132.0 lbs.	279.0 lbs.
17	TOTAL WEIGHT OF BOMB	85.0 lbs.	225.0 lbs.	485.0 lbs.
18	CHARGE / WEIGHT RATIO	46.0 %	55.0 %	58.0 %

COPY NO.

BOMB DATA

FILE NO.: 1291.1

NATIONALITY: BRITISH	INFORMATION DATE: October 1942
SIZE: 8½ lb. Mark II 11½ lb. Mark I	TYPE: Practice Smoke or Flash Bomb
TARGET:	FUZE: Simple impact fuze which is armed by removal of cotter key but held safe by shear plug.

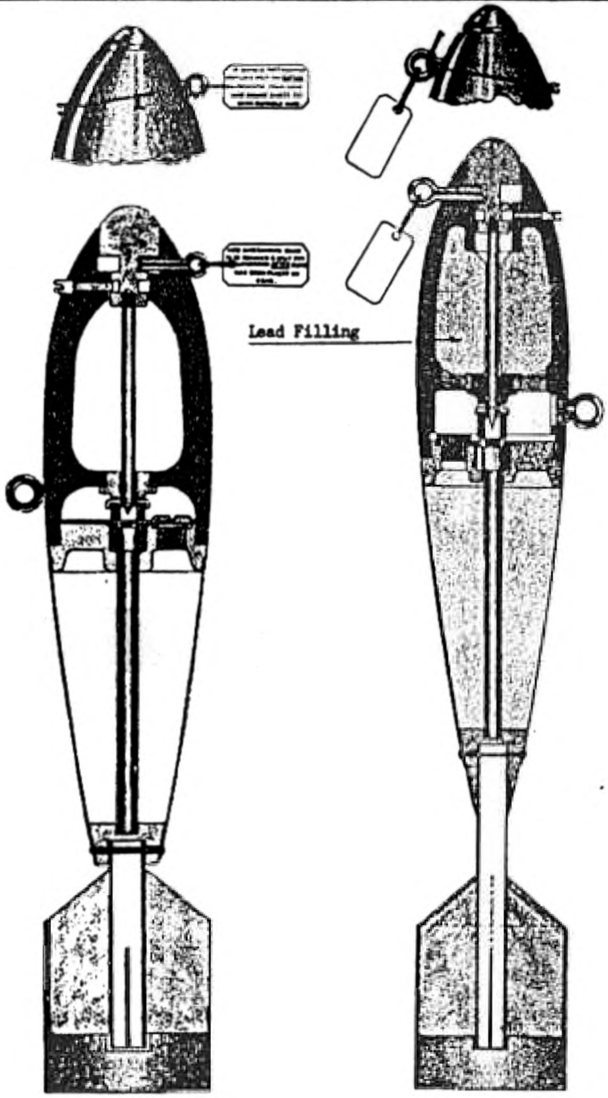

8½ lb. Mark II

11½ lb. Mark I

2 5 8

COPY NO. ____________

BOMB DATA 1291.1

NATIONALITY: BRITISH	INFORMATION DATE: October 1942
SIZE: 8 1/2 lb. Mark II 11 1/2 lb. Mark I	TYPE: Practice Smoke or Flash Bomb
TARGET:	FUZE: Simple impact fuze which is armed by removal of cotter key but held safe by shear plug.

	DATA	8 1/2 lb. Mark II	11 1/2 lb. Mark
1	OVERALL LENGTH	16.0 inches	18.0 inches
2	LENGTH OF BODY	12.0 inches	
3	DIAMETER OF BODY	3.0 inches	3.0 inches
4	THICKNESS OF WALL	1/2 inch	
5	MATERIAL OF WALL	-	Cast Iron
6	CONSTRUCTION OF BODY	The body of these bombs is constructed in two parts: 1) a cast iron nose section with a stiffening rib at rear of this section and 2) a sheet steel cone welded to a cast iron plate which is threaded to screw into the nose piece. This plate contains the filling plug by which the charge is put into the conical section. Another cast iron plate closes the tail end of the bomb. The only difference in the two sizes of bombs is the filling of the cast section of the bomb with lead and differences in dimensions.	
7	TYPE OF SUSPENSION	These bombs are always he[illegible] horizontally	
8	CONSTRUCTION OF SUSPENSION LUG	Eyebolt is screwed [illegible] body	
9	COLOR & MARKINGS ON BOMB AND TAIL	The bomb is painted white and has two 1/2 inch green bands 1/2 inch apart painted around the center of the tail unit.	The bomb is painted white and has two 1/2 inch black bands 1/2 inch apart painted around container in the tail and a red ring around the nose.
10	LENGTH OF TAIL		
11	WIDTH OF TAIL	3 inches	3 inches
12	MATERIAL OF TAIL	Tinned plate and mild steel.	Tinned plate and mild steel.
13	CONSTRUCTION OF TAIL	A cylindrical steel tube to which are attached four vanes. A cylinder is then attached to the four vanes. The entire unit is held to bomb by a small pin.	
14	WEIGHT OF TAIL		
15	TYPE OF FILLING	Three types of fillings may be used in these bombs: 1) Stannic chloride (smoke), 2) Titanium Tetrachloride (smoke), and 3) Magnesium turnings and gunpowder (flash).	
16	WEIGHT OF FILLING	1) 1 lb. 3 oz. 2) 1 lb. 0 oz.	1) 1 lb. 3 oz. 2) 1 lb. 0 oz.
17	TOTAL WEIGHT OF BOMB	1) 8 lb. 7 oz. 2) 8 lb. 4 oz.	1) 11 lb. 8 oz. 2) 11 lb. 5 oz.
18	CHARGE / WEIGHT RATIO		

COPY NO.___

FUZE DATA

FILE NO.: 2211.N1

NATIONALITY: BRITISH		INFORMATION DATE: October 1942	
DESIGNATION (A) D.A. No. 8 Mark I (B) D.A. No. 9 Mark I	PRINCIPAL MARKING	(A) D.A. No. 8 Mark I (B) D.A. No. 9 Mark I	
	CLASSIFICATION	Mechanical Nose Impact	
	TYPE OF MISSILE	H.E. Bombs	
MARKINGS AND SUBSIDIARY MARKINGS:		BOMBS USED IN: (A) 112 lb. Mark VI or VII 520 lb. R.A.F. Mark I 550 lb. R.A.F. Mark I (B) 112 lb. Mark V 520 lb. R.L. Mark I 550 lb. R.L. Mark I	

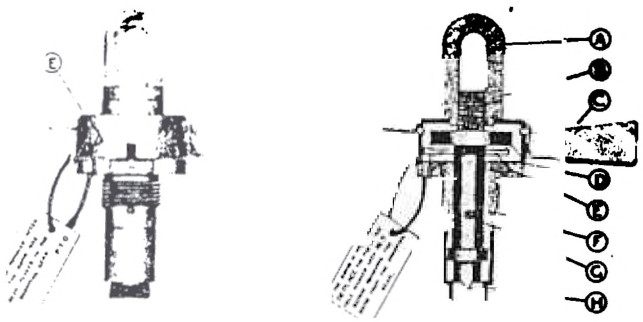

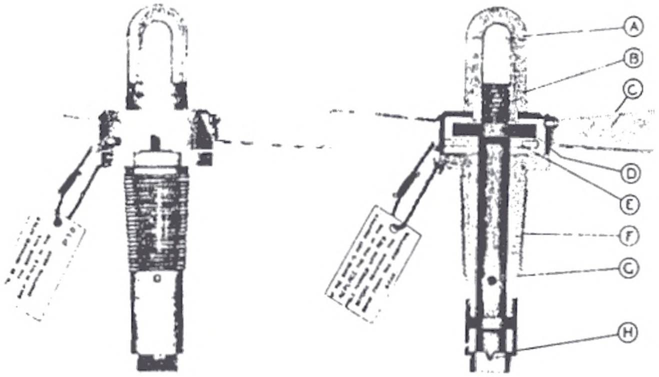

BOMBS AND FUZES

SECTION 4

BRITISH FUZES

COPY NO.__________

FUZE DATA | FILE NO.: 2200

NATIONALITY: BRITISH | INFORMATION DATE: October 1942

BRITISH AIRCRAFT BOMB FUZES

I. General Notes.

A. The British fuzes are manufactured in two parts consisting of a pistol and a detonator. In operation, the pistol is the mechanism used to initiate the cap contained in the cartridge head of the detonator. A steel container is fitted around the pistol and detonator to prevent corrosion.

B. These parts are manufactured as self-contained units to be screwed into the nose or tail of the bomb. A majority of the units are interchangeable; however this varied use is limited by the differences in operation between the nose and the tail types.

C. The nose pistols depend for their action on a pressure plate attached to the upper end of a plunger, the lower end of the plunger being tapered to form the striker. On impact, this plate forces the plunger inwards, causing the striker to detonate the cap in the cartridge head of the detonator.

D. The tail pistols depend for their operation on an inertia weight, the lower end of which is tapered to form the striker. The inertia weight is locked in position during transit by the arming vane nut and a creep spring. When the safety wires are withdrawn and the bomb is released, the arming vanes rotate to unscrew the arming vane nut and only the creep spring prevents the striker from hitting the cap. On impact, the inertia weight compresses the spring and allows the striker to fire the cap in the cartridge head of the detonator.

E. The nose fuzes are generally used for instantaneous action while the tail fuzes are generally used for delay action. In the British method of selective fuzing which is operated by electrical means, the safety wire may be removed from either the nose fuze or the tail fuze or both, thus determining which fuze or fuzes are to be armed. This permits the bombardier to make a choice between instantaneous or delay action.

II. Types of Safety Devices.

Any of the following safety devices may be fitted to an Aircraft Bomb Fuze:-

A. Safety Pin - This is a split pin which passes either through the plunger or through the inertia weight and prevents their movement in either direction. It is removed immediately prior to flight.

B. Shearing Wire - This is a plain cylindrical wire and is fitted to nose fuze only. The thickness of the wire being the measure of the force required to shear it. It serves two purposes:-

1. If the safety pin is removed, the plunger is still locked.

2. If the bomb strikes a light obstruction, such as the branch of a tree, etc., the shearing wire prevents the fuze from operating.

C. Arming Vanes - These are permanently attached to the arming vane nut, or dome, which is screwed onto the plunger or inertia weight and so prevents movement of the striker until the bomb has fallen some distance.

D. Arming Vane Stops - These are fitted to the bomb carrier or to the bomb fuze, depending on the type, and prevent the rotation and consequent loss of the arming vanes during the flight of the aircraft. They, therefore, serve to retain the fuze in a safe condition.

BRITISH AIRCRAFT BOMB FUZES

E. Pressure Plate Stop - This is fitted between the pressure plate of the nose fuze and the body: it prevents the pressure plate, plunger and striker from being driven into the bomb when the fuze is dropped "safe".

F. Fusing Wires - These are fitted to the bomb carrier and form the means of fusing the bomb as "safe" or "live" on release.

G. Red Ring on striker Pellet - This indicates the position of the striker pellet in the body of the tail fuze, or the position of the arming vanes spindle in the pressure plate of the nose fuze.

H. Creep Spring - This is fitted in tail fuzes to hold the striker away from the detonator cap when the arming vanes have come off during the fall of the bomb.

III. Types of Threads Used on Bomb Fuzes.

The following body threads are employed in the construction of noses and tail fuzes:-

A. Nose Fuze Body Threads.

1. Admiralty taper.

2. Standard parallel.

B. Tail Fuze Body Threads.

1. Standard parallel (1.375 inches or 1.1 inches diameter).

Note:- Certain bombs have a larger diameter internal thread at the tail end than that of the tail fuzes; therefore in these bombs it is necessary to use Adapter Fuze Bomb, 1.375 inches, in conjunction with the fuze.

COPY NO.

FUZE DATA FILE NO.: 2211.N3

NATIONALITY: BRITISH		INFORMATION DATE: October 1942
DESIGNATION (A) D.A. No. 14 Mark I (B) D.A. No. 15 Mark I (C) D.A. No. 15 Mark II	PRINCIPAL MARKING	(A) D.A. No. 14 Mark I (B) D.A. No. 15 Mark I (C) D.A. No. 15 Mark II
	CLASSIFICATION	Mechanical Nose Impact
	TYPE OF MISSILE	(A) - (B) New Bombs (C) - H.E. Aircraft Bombs

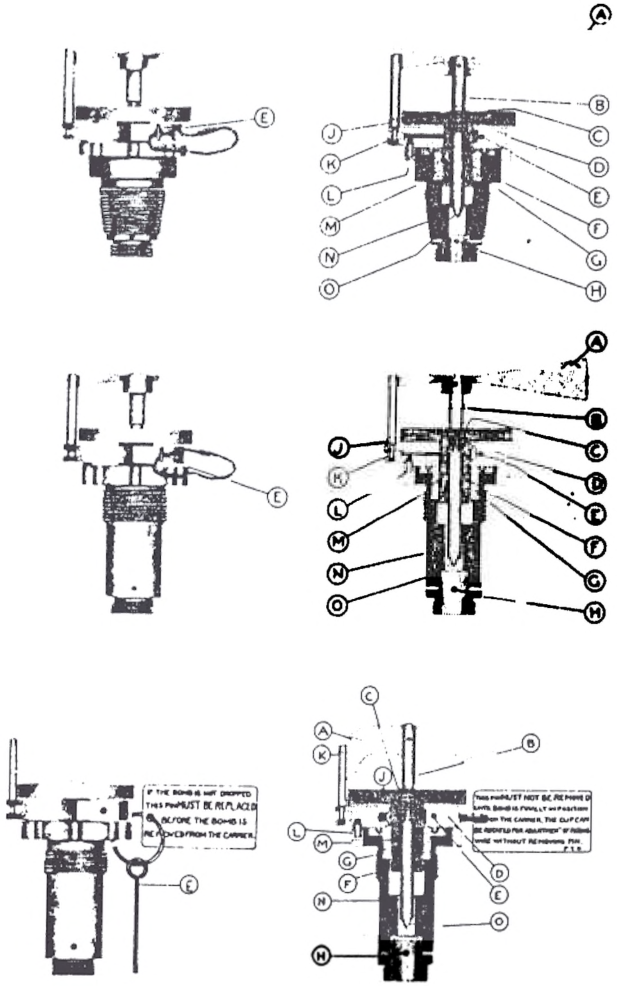

OPERATION

When the bomb is released from the plane, the pressure plate stop (D) is retained on the carrier by the fuzing wire. The arming vanes are then free to rotate, causing the striker to be screwed inwards. On impact, the pressure plate is driven forward, shearing the shear wire (G) and carrying the striker to the detonator.

2638

COPY NO.

FUZE DATA FILE NO.: 2211.N1

NATIONALITY: BRITISH		INFORMATION DATE: October 1942
DESIGNATION (A) D.A. No. 8 Mark I (B) D.A. No. 9 Mark I	PRINCIPAL MARKING	(A) D.A. No. 8 Mark I (B) D.A. No. 9 Mark I
	CLASSIFICATION	Mechanical Nose Impact
	TYPE OF MISSILE	H.E. Bombs
MARKINGS AND SUBSIDIARY MARKINGS:		BOMBS USED IN: (A) 112 lb. Mark VI or VII 520 lb. R.A.F. Mark I 550 lb. R.A.F. Mark I (B) 112 lb. Mark V 520 lb. R.L. Mark I 550 lb. R.L. Mark I

	DATA	(A)	(B)
1	COLOR	Brass	Brass
2	OVERALL LENGTH (less booster)	4.9 inches	6.1 inches
3	OVERALL WIDTH	Body - 2.0 inches Vanes - 6.0 inches	Body - 2.0 inches Vanes - 6.0 inches
4	MATERIAL OF CONSTRUCTION	Body brass, plunger steel, safety pin brass, and shearing pin 5/32 inch brass.	Body, safety pin and shear wire made of brass. Plunger is made of steel.
5	DESCRIPTION These fuzes consist of a brass body (F) with standard parallel nose threads, the lower portion being threaded to screw into an exploder. The D. A. No. 9 Mark I fuze has the Admiralty taper nose threads instead of the parallel threads. There are two spanner flats cut on the upper portion of the body. There is a stop pin on the upper surface to prevent the arming vane assembly from jamming against the body. The plunger (B), made of steel, has a pressure plate (D) screwed permanently onto the threaded portion of the outer end. The arming vane assembly (C) consists of two blades rivetted to a dome, and a suspension hook (A) - not in use at present- also attached to the dome. The whole assembly is screwed into the outer end of plunger (B). Safety Devices:- The safety pin (E) is made of brass and passes through the dome and plunger. The shearing wire (G) is a 5/32 inch brass wire which passes through the body and plunger. When the arming vane assembly (C) is in position, the pressure plate (D) is prevented from being driven in by the dome or nose piece. There are two indentations on the inner periphery of the arming vane dome which engage against a stop on the upper surface of the body (F) and prevent the dome from jamming against the body. The arming vanes are prevented from rotating by means of a stop in the bomb rack within the plane		
6	POSITION AND METHOD OF FIXING IN BOMB	Screwed into the end of the exploder tube or adapter at the nose of bomb, using a spanner wrench on flats.	
7	FUZES LIKELY TO BE FOUND WITH	Tail: No. 5B Mark I or II	Tail: No. 5B Mark I or II
8	COMPONENTS OF EXPLOSIVE TRAIN	Cartridge type with cap. Can be fitted with either instantaneous or short delay components.	Cartridge type with cap. Screwed on bottom of fuze.
9	ARMING TIME		
10	OPERATION The safety pin is removed after the bomb is placed in the dropping gear, and when the bomb is released from the plane the arming vanes are completly unscrewed by the action of the air, thus arming the fuze. When the bomb strikes the ground, the pressure plate (D) forces the plunger (B) inwards, shearing the shear wire (G). This action brings the striker in contact with the cap in the cartridge head of the detonator.		

COPY NO.

FUZE DATA

FILE NO.: 2211,N2

NATIONALITY: BRITISH		INFORMATION DATE: October 1942
DESIGNATION D.A. No. 13 Mark I	PRINCIPAL MARKING	D.A. No. 13 Mark I
	CLASSIFICATION	Mechanical Nose Impact
	TYPE OF MISSILE	Bomb, Aircraft, H.E.S.N. Mark II
MARKINGS AND SUBSIDIARY MARKINGS:		BOMBS USED IN: Used only in the nose of the Bomb, Aircraft, H.E.S.N. Mark II

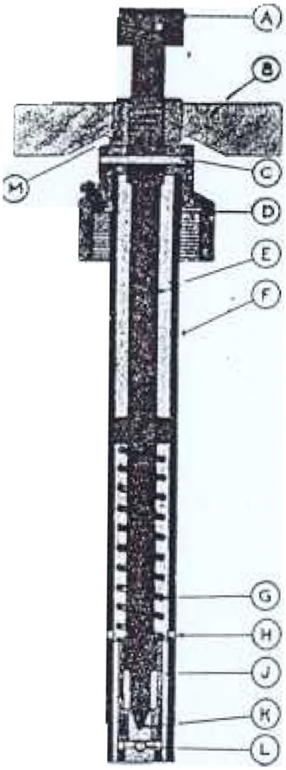

FUZE DATA

COPY NO. 2638

FILE NO.: 2211.N2

NATIONALITY: BRITISH		INFORMATION DATE: October 1942
DESIGNATION D.A. No. 13 Mark I	PRINCIPAL MARKING	D.A. No. 13 Mark I
	CLASSIFICATION	Mechanical Nose Impact
	TYPE OF MISSILE	Bomb, Aircraft, H.E.S.N. Mark II
MARKINGS AND SUBSIDIARY MARKINGS:		BOMBS USED IN: Used only in the nose of the Bomb, Aircraft, H.E.S.N. Mark II

	DATA	D.A. No. 13
		Brass
2	OVERALL LENGTH	14.7 inches (less booster)
	OVERALL WIDTH	2.6 inches
4	DIAMETER OF VANES	5.0 inches Six blades.
5	MATERIAL OF CONSTRUCTION	Brass collar and vanes, steel tube and plunger rod.
6	DESCRIPTION	This fuze consists of a steel tube (F) with the lower end threaded to screw into an adapter. A bushing is pressed into the lower end of tube (F) and serves as a guide to the plunger rod (E). The tube also has four gas escape grooves (J) and two gas escape holes (H). The top of tube (F) screws into the brass body collar (D). This collar is threaded to screw over the central tube of the bomb and to receive the upper end of the tube (F). A small set screw in the collar (D) prevents it from unscrewing from the central tube of the bomb. The plunger rod (E) is made of steel and terminates in the striker (K). There is a collar approximately half-way along the plunger rod which serves as a base for the creep spring (G). The upper end of plunger rod (E) is threaded in two places; the lower threads carry the arming vanes (B), and the upper threads the plunger cap (A). The arming vanes (B), of which there are six blades, are made of cast brass. There is a vane stop screw (M) fixed to the under side of the vane boss. Safety Devices:- The shearing wire (C) is 5/32 inch in diameter, and passes through the body collar and the plunger. The creep spring (G) fits between collar on plunger rod and inner side of the plunger rod bushing. The arming vanes (B) are kept from turning during the flight of the plane by the safety pin clip.
7	POSITION AND METHOD OF FIXING IN BOMB	Screwed into the end of the central tube of the bomb, and held in place by a set screw.
8	FUZES LIKELY TO BE FOUND WITH	Tail Fuze No. 12 Mark I
9	COMPONENTS OF EXPLOSIVE TRAIN	Detonator and exploder assembly screw into the lower body tube.
10	ARMING TIME	
11	OPERATION	When the bomb is released from the plane, the safety pin clip is removed by the fuzing wire and the vanes are free to rotate, thus arming the fuze. On impact, the inner side of the plunger cap is driven against the vane boss, and the vanes, which do not fall clear, thus assist as a pressure plate. The plunger rod is forced in, shearing the shear wire and compressing the creep spring, allowing the striker to come in contact with the cap in the cartridge head of the detonator.

COPY NO..

FUZE DATA | FILE NO.: 2211.N5

NATIONALITY: BRITISH		INFORMATION DATE: October 1942
DESIGNATION (A) D.A. No. 19 Mk. I or II (B) D.A. No. 20 Mk. I, II or III (C) D.A. No. 27 Mark I	PRINCIPAL MARKING	(A) D.A. No. 19 Mark I or II (B) D.A. No. 20 Mark I, II or III (C) D.A. No. 27 Mark I
	CLASSIFICATION	Mechanical Impact - Nose Fuze
	TYPE OF MISSILE	H.E. Bombs

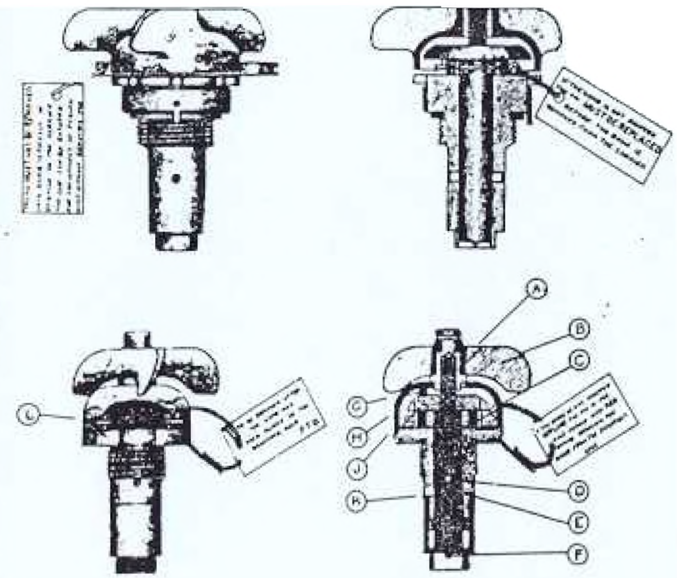

OPERATION

When the bomb is released from the plane, the fuzing wire retains the pressure plate stop (C) and the arming vanes are then free to rotate. The vanes unscrew and fall off during flight. On impact, the pressure plate forces the striker inward, shearing the shear wire and in turn piercing the cap of the detonator.

COPY NO. 2 38

FUZE DATA | FILE NO.: 2211.N3

NATIONALITY: BRITISH		
DESIGNATION (A) D.A. No. 14 Mark I (B) D.A. No. 15 Mark I (C) D.A. No. 15 Mark II	PRINCIPAL MARKING	
	CLASSIFICATION	..
	TYPE OF MISSILE	
MARKINGS AND SUBSIDIARY MARKINGS:		

	DATA	(A)	(B)	(C)
1	COLOR	Brass	Brass	Brass
2	OVERALL LENGTH (less booster)	3.8 "	4.3 "	4.16 "
3	OVERALL WIDTH	Body 1.9 " Vanes 4.6 "	Body 1.9 " Vanes 4.6 "	Body 1.9 " Vanes 3.0 "
4	MATERIAL OF CONSTRUCTION	Arming vanes steel. Brass Body and arming vane spindle		Body brass, vanes Aluminum alloy.

5 DESCRIPTION

These fuzes consist of a brass body with admiralty taper nose threads on the D.A. No. 14 Mark I and standard parallel threads on the D.A. No. 15 Mark I and D.A. No. 15 Mark II. The lower portion is threaded to screw into an exploder. Gas escape holes (?) are drilled above the lower threads into the interior of the body. A gland (G) screws into the center of the body. At the top of the body there are eight semi-circular notches cut into the upper periphery of it. The pressure plate (J) is permanently attached to the stem (F) which is located in the body by an eccentric shearing wire ( ), 1/16 inch in diameter, passing through the stem (F) and the gland (G). The stem is bored centrally and threaded to take the arming vane spindle (J). Two steel vanes are permanently attached to the brass arming vane spindle, which terminates in the striker (O). A pressure plate stop (D) is interposed between the body and the pressure plate and is secured by a safety pin (E) for transit. A small lug (I) on the outer end engages in a serration in the body. The arming vane stop (K) is attached to the outer end of the pressure plate stop.

Safety Devices:- A U-shaped spring rivetted to the pressure plate stop fits around the pressure plate spindle. An eccentric shearing wire (M) passes through stem (F) and gland (G). A pressure plate stop pin (L) prevents the striker spindle from moving forward or rotating. The arming vane stop (K) prevents the arming vanes from rotating. If the red ring (C) is visible, the fuze is safe.

6	POSITION AND METHOD OF FIXING IN BOMB	Screwed into the nose of bomb by spanner wrench.
7	FUZES LIKELY TO BE FOUND WITH	
8	COMPONENTS OF EXPLOSIVE TRAIN	Detonator screwed onto lower part of fuze body. Entire fuze assembly fits into exploder tube.
9	ARMING TIME	

10 REMARKS

1) Fuzes No. D.A. 14 Mark I and D.A. No. 15 Mark II are not at present included in the fuzing diagrams, but the design is retained i the service for possible incorporation in new types of bombs.

2) Fuze D.A. No. 15 Mark II is similar to Pistol, Bomb, D.A. No 15 Mark I, and differs principally in the following respects:

a. The arming vanes are of cast aluminum alloy, and are of a different shape.

b. A split ring is used on the safety pin instead of the loop formerly used.

COPY NO.____

FUZE DATA

		FILE NO.: 2211.M4
NATIONALITY: BRITISH		INFORMATION DATE: October 1942
DESIGNATION D.A. No. 16 Mark I	PRINCIPAL MARKING	D.A. No. 16 Mark I
	CLASSIFICATION	Mechanical Nose Impact
	TYPE OF MISSILE	Bomb Aircraft, H.E.R.L. 20 lb. Mark I

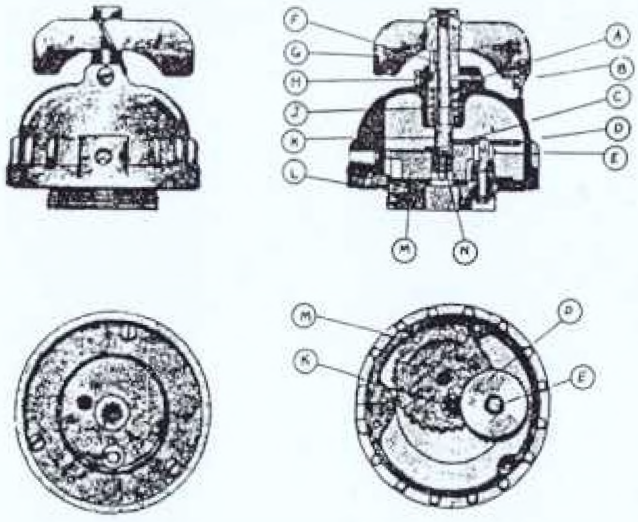

OPERATION When the bomb is on the carrier, the arming vanes are prevented from rotating by the arming vane stop. The normal setting for the striker pellet gear wheel is when the number '25' is visible through the body plate hole. On release of the bomb, the arming vanes rotate and acting through the intermediate gear wheel, cause the striker pellet gear wheel to revolve. After approximately 25 revolutions of the arming vanes, the stop (C) on the upper surface of the striker pellet gear wheel (M) comes into contact with the lower end of the plunger (K). At the same time, the small diameter gear wheel (E) is brought opposite the cut away portion of the striker pellet gear wheel (M). On impact, the arming vanes, plunger, and guide bush are driven inwards, thus breaking the shearing wire (A). At the same time, the plunger spring is compressed. The inner end of the plunger is brought into forcible contact with the striker pellet, and drives it inwards onto the cap of the detonator.

FUZE DATA

NATIONALITY: BRITISH		
DESIGNATION D.A. No. 16 Mark I	PRINCIPAL MARKING	- 1
	CLASSIFICATION	Mechanical Nose Impact
	TYPE OF MISSILE	Bomb, Aircraft, H.E.R.L. 20 lb. Mark I.
MARKINGS AND SUBSIDIARY MARKINGS:		BOMBS USED IN: This fuze may only be used with Bomb, Aircraft, H.E.R.L. 20 lb. Mark I.

	DATA	
1	COLOR	
2	OVERALL LENGTH	3.3 inches (less booster)
3	OVERALL WIDTH	Body 3.1 inches (approx.) Arming vanes 3.1 inches (five vanes)
4	MATERIAL OF CONSTRUCTION	Arming vanes aluminum, gear train brass and plunger brass.

5 **DESCRIPTION**

Body plate (L) is threaded on its rear surface to screw into the nose of the bomb, and bored centrally to allow the striker pellet (N) to move on to the cap of the detonator. The striker pellet gear wheel (M) is attached to top of plate (L) and engages with the intermediate gear wheels (D) and (E) which are of two different diameters. Gear wheel (M) is toothed on the greater part of its circumference and the remaining part is cut away. The triangular stop (C) is formed on its upper surface at one end of the gear teeth. Adjacent to this stop is the hole in which the striker pellet (N) is housed. The under surface of the gear wheel (M) is engraved with the numbers 5, 10, 15, 20, and 25 at the same radius as the striker pellet hole. The intermediate gear wheel consists of a small gear (E) which engages with striker pellet gear wheel (M), and a large diameter gear wheel (D) which engages with the plunger gear wheel (K). The body dome is attached to plate (L) with three screws. At the top of the dome is a vertical hole for the guide bushing (F). The plunger is brass and has five aluminum vanes rivetted to the plunger. The guide bushing (F) is held in place by a grub screw (H) and shearing wire (A), and the plunger is free to revolve in this guide. The lower end of the plunger (K) is toothed to engage with the large diameter intermediate gear wheel (D).

Safety Devices:- The shear wire (A) passes through the dome and the plunger guide (F). Until the gear wheel (M) has been moved so that the striker pellet (N) lies directly under the plunger (F) and (K), it is impossible for the striker pellet to move onto the cap of the detonator. Approximately 25 revolutions of the arming vanes (G) are necessary to bring the hole in the striker pellet gear wheel over the hole in the body plate. One of the arming vanes has a hole drilled in it, and is secured to a lug on the dome by a safety wire (B), for transport only.

6	POSITION AND METHOD OF FIXING IN BOMB	Screwed into nose of bomb.
7	FUZES LIKELY TO BE FOUND WITH	None.
8	COMPONENTS OF EXPLOSIVE TRAIN	Booster fitted separately in bomb.
9	ARMING TIME	Can be set to arm in 1 - 25 revolutions of vanes.
10	REMARKS	Fuses must never be used at shorter settings than '25', visible through the body plate hole.

COPY NO.____

FUZE DATA

FILE NO.: 2211.17

NATIONALITY: BRITISH		INFORMATION DATE: October 1942
DESIGNATION D.A. No. 32 Mark II* and III	PRINCIPAL MARKING	D.A. No. 32 Mark II* and III
	CLASSIFICATION	Mechanical Nose Impact
	TYPE OF MISSILE	A.S. - H.E. Bomb

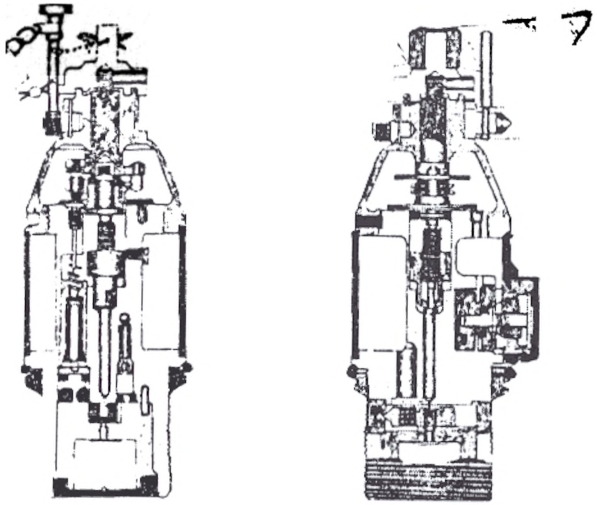

6	POSITION AND METHOD OF FIXING IN BOMB	Screwed into nose of bomb and secured by means of a locking ring.
7	FUZES LIKELY TO BE FOUND WITH	None.
8	COMPONENTS OF EXPLOSIVE TRAIN	
9	ARMING TIME	

10 REMARKS The thickness of the wall of the steel top cap (24) is so proportioned that if a fuze fitted to a bomb is dropped from a low height and strikes a steel plate 3/8 inch or more in thickness, the cap will collapse sufficiently to cause the striker to penetrate the detonator and so result in the detonation of the magazine (36). The cap is, however strong enough to prevent the fuze functioning D.A. when dropped on to water from heights up to 4,000 feet.

1. Fuzes Mark II* and III are identical in construction, the Mark II* being converted Mark II fuzes.

2. Direct action and delay mechanisms are provided, and in addition a geared arming vane safety mechanism, designed to keep the fuze safe for the first 50 feet of free flight when released at an air speed of 100 miles per hour, but just to permit functioning in 200 feet at that speed.

3. The fuze is capable of being dropped safe in an emergency by releasing the bomb while the fuze control of the carrier is in the SAFE position.

COPY NO. 2638

FUZE DATA FILE NO. 2211.35

NATIONALITY: BRITISH		INFORMATION DATE: October 1942
DESIGNATION (A) D.A. No. 19 Mk. I or II (B) D.A. No. 20 Mk. I, II or III (C) D.A. No. 27 Mark I	PRINCIPAL MARKING	(A) D.A. No. 19 Mark I or II (B) D.A. No. 20 Mark I, II or III (C) D.A. No. 27 Mark I
	CLASSIFICATION	Mechanical Impact - Nose Fuze
	TYPE OF MISSILE	H. E. Bombs
MARKINGS AND SUBSIDIARY MARKINGS:		BOMBS USED IN: (A) 50, 120, 250 & 500 lb. G.P. Mark I bombs; 520 & 550 lb. R.A.F. Mark I bombs; 112 lb. R.L. Mark VI & VII; and 250 lb. R.L. Mark II. (B) 112 lb. R.L. Mark V and 250, 520 & 550 lb. R.L. Mark I. (C) 250 & 500 lb. G.P. Mark IV

	DATA	(A)	(B)	(C)
1	COLOR	Brass	Brass	Brass
2	OVERALL LENGTH (less booster)	4.1 inches	5.3 inches	4.2 inches
3	OVERALL WIDTH	Body - 2.0 inches Vanes - 3.0 inches		Body - 1.9 inches Vanes - 4.0 inches
4	MATERIAL OF CONSTRUCTION	Brass bodies, steel plungers and aluminum vanes.		
5	DESCRIPTION	These fuzes consist of a brass body (E) with standard parallel nose threads or admiralty taper threads, and the lower portion threaded for the exploder. Plunger (K), made of steel, passes centrally through the body, the lower end terminating in the striker (F). The upper end is threaded, and onto this is screwed the pressure plate (J). The upper surface of the pressure plate is rounded and has eight semi-circular notches cut in the periphery of it. The brass shear wire (D) is 5/32 inch in diameter. The arming vanes consist of five aluminum vanes permanently attached to the dome (H), which has two diametrically opposed openings in its lower surface, giving clearance for the pressure plate stop (C). On the inside of the arming vane dome is a small stud and dome stop pin (G). The arming vanes fit over the arming vane nut (A) and are secured by a pin. This nut screws onto the threaded extension of the plunger (K). The pressure plate stop (C) is roughly horseshoe in shape. The longer arms are bored transversely to take the safety pin (L). A U-shaped spring clip is rivetted onto the pressure plate stop which clips around the plunger, thus holding the pressure plate stop in place after the safety pin is removed.		
6	POSITION AND METHOD OF FIXING IN BOMB	Screwed into adapter at nose of bomb using spanner wrench on flats.		Screwed into adapter at nose of bomb and secured by a spring locking collar.
7	FUZES LIKELY TO BE FOUND WITH	Tail No. 58 Mk. I or II, No. 21 Mk. I or II and No. 22 Mk. I or II.	Tail No. 58 Mk. I or II	No. 28 Mk. I, tail pistol (fuze) can be used as either a tail plug or a tail fuze.
8	COMPONENTS OF EXPLOSIVE TRAIN	Cartridge type with cap, screwed on bottom of fuze.		Cartridge type with cap.
9	ARMING TIME			
10	REMARKS	1. Fuzes D.A. No. 19 Mark I or II are conversions of old stocks of D.A. No. 8 Mark I to a design which permitted the alternative use of cast iron for the body. 2. Fuzes D.A. No. 20 Mark I, II or III are similar to the D.A. No. 19 Mark I or II except that they have admiralty taper nose threads instead of the standard parallel threads. 3. Fuze, Aircraft Bomb D.A. No. 20 Mark I is a conversion of old stocks of Fuze, Aircraft Bomb D.A. No. 9 Mark I. 4. Aircraft bombs fitted with these fuzes should not be dropped SAFE from heights in excess of 3000 feet.		

COPY [redacted]

FUZE DATA

FILE NO.: 2211.M6

NATIONALITY: BRITISH		INFORMATION DATE: October 1942
DESIGNATION D.A. No. 29 Mark I D.A. No. 34 Mark I	PRINCIPAL MARKING	D.A. No. 29 Mark I D.A. No. 34 Mark I
	CLASSIFICATION	Mechanical Nose Impact
	TYPE OF MISSILE	20 lb. Fragmentation and 40 lb. G.P.-H.E. Bombs
MARKINGS AND SUBSIDIARY MARKINGS:		BOMBS USED IN: 20 lb. Fragmentation and 40 lb. G.P.-H.E.

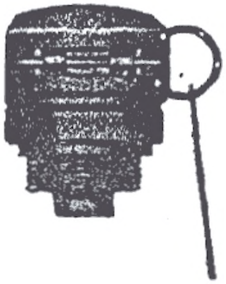

2638

FUZE DATA

NATIONALITY: BRITISH		
DESIGNATION D.A. No. 29 Mark I D.A. No. 34 Mark I	PRINCIPAL MARKING	
	CLASSIFICATION	
	TYPE OF MISSILE	
MARKINGS AND SUBSIDIARY MARKINGS:		BOMBS USED IN: 20 lb. Fragmentation and 40 lb. G.P.-H.E.

	DATA	
1	COLOR	Color of the metal.
2	OVERALL LENGTH	
3	OVERALL WIDTH	
4	MATERIAL OF CONSTRUCTION	
5	DESCRIPTION	These fuses consist of a brass body with the standard parallel nose thread. A locking device for securing it to the bomb is fitted to the body, and consists of a spring collar around the body with projections on its under side which engage in indentations in the body. When the fuse is screwed into the body of the bomb, this lug engages one of the holes in the face of the exploder container. A steel pressure plate is screwed to the steel striker which travels in the body of the fuse. A phosphorus bronze shear pin is fitted through the body and the striker of the fuse. Instead of being fitted with an arming vane, the pressure plate is protected by a spring operated safety cap. During transit, the safety cap is retained in position by a safety fork passing underneath the pressure plate and through slots cut in the cap. Safety Devices: During transit on the ground, the cap is retained in position by the safety fork. If the fuse is to be used in a bomb which is carried in a container, the safety pin and fork are removed and the safety cap is then held in position by the wall of the container. If the fuse is used in a bomb which will not be carried in a container, the safety pin is removed and the fuzing wire attached to the safety fork.
6	POSITION AND METHOD OF FIXING IN BOMB	Screwed into exploder adapter tube at nose of bomb, and secured by a spring locking collar.
7	FUZES LIKELY TO BE FOUND WITH	None.
8	COMPONENTS OF EXPLOSIVE TRAIN	Has individual exploder tube at nose containing the detonator and exploder charge.
9	ARMING TIME	
10	OPERATION	On release from the container, the safety cap is forced away from the pressure plate by the spring and the bomb becomes armed. On impact, the pressure plate is forced inwards, shearing the shear wire, which results in the striker piercing the primer cap.
11	REMARKS	1. These fuses are for use in bombs which are carried in a bomb container unless instructions to the contrary are issued. 2. The No. 34 Mark I is identical with the No. 29 Mark I except that an aluminum shear wire is fitted in place of a phosphorus bronze wire, and also a more robust safety cap spring is fitted. 3. This fuse has no vanes. There is a spring operated aluminum cap which fits over the pressure plate.

COPY NO.__________

FUZE DATA

FILE NO.: 2211.T1

NATIONALITY: BRITISH		INFORMATION DATE: October 1942
DESIGNATION (A) No. 5B Mark I (B) No. 5B Mark II (C) No. 23 Mark I/A/	PRINCIPAL MARKING	(A) No. 5B Mark I (B) No. 5B Mark II (C) No. 23 Mark I/A/
	CLASSIFICATION	Mechanical Tail Impact
	TYPE OF FILLING	(A) & (B) Aircraft H.E. Bombs (C) Smoke-float, Aircraft, Navigation Mark I.

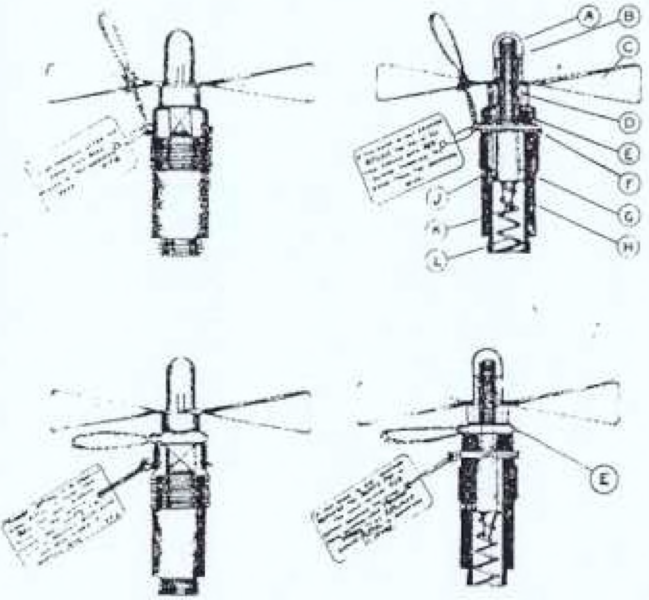

OPERATION

The safety pin (F) is removed from the fuze when the bomb is placed in the carrier. The striker pellet (G) during flight is locked in position by the arming vane nut (D). When the bomb is released from the plane, the arming vane nut (D) is unscrewed by the action of the air on the arming vanes, and the striker is free to move. When the bomb hits the ground, the striker moves forward by its own momentum, compressing the striker spring, and allowing the striker to hit the cap in the detonator.

2638

COPY NO.

FUZE DATA

FILE NO.: 2211.N7

NATIONALITY: BRITISH		INFORMATION DATE: October 1942
DESIGNATION D.A. No. 32 Mark II* and III	PRINCIPAL MARKINGS	D.A. No. 32 Mark II* and III
		Mechanical Nose Impact
	TYPE OF MISSILE	A.S.-H.E. Bomb
		BOMBS USED IN: 100 lb., 250 lb. and 500 lb. A.S.-H.E. Bombs Mark I, II and III

1	COLOR	
2	OVERALL LENGTH	
4	MATERIAL OF CONSTRUCTION	

5 DESCRIPTION AND OPERATION

This fuze consists of a body in which is housed the arming assembly and the delay assembly. The arming assembly is fitted in the upper end of the fuze body and involves a system of reduction gears where in the teeth of a wheel (5) on the lower end of the arming vane spindle (16) engage with the teeth of two other wheels, (38) and (39), one of which wheels (38) is attached to the arming spindle (41). This assembly gives a ratio of 60 turns of the arming vanes (15) for one of the arming spindle (41).

D.A. Mechanism: When the bomb is released, the arming vane, freed from the arming vane stop (19) which is attached to the safety clip (21), rotates, and working through the reduction gear described above, causes the arming nut (28) to be drawn slowly towards the nose of the fuze, the nut being prevented from rotation by the guide screw (26). This causes the striker (32), which is assembled in the base of the arming nut, to be withdrawn from the shutter (14), which then moves across the fuze under the action of its spring (34) until the main detonator (35) is immediately underneath the point of the retracted striker. The shutter is automatically locked in this position by a spring plunger (47). The fuze is now said to be armed.

Delay Mechanism: Situated to one side of the striker is an inertia pellet (10) containing a small igniferous detonator (9) and until the arming nut (28), which retains the striker in engagement with the shutter, has been withdrawn by rotation of the arming vane spindle, the inertia pellet is definitely prevented from approaching the needle (7). After the fuze is armed the inertia pellet remains supported only upon a weak creep spring (8) and if the bomb is sufficiently decelerated on striking the water from a drop of 500 feet or more, or on striking a target offering slight resistance to penetrating, the inertia pellet will move relative to the rest of the fuze, and thus cause the detonator to strike the needle and fire. The flash will pass through the hole (12) in the inertia pellet and ignite the powder in the plug (13), the flash from which passes through a hole in the fuze body into the recess at the rear of the time ring (42). This ignites a pellet connected to the time ring, the composition in which will burn round until the powder pellets (29) and (30) are reached. The flame from the latter is directed upon the main detonator in the shutter which then fires, and causes detonation of the fuze magazine. This fuze can be set to function at different depths in the water by varying the angular distance between the ignition pellet in the time ring and the column of pellets which ignite the main detonator. This regulates the amount of composition to be burnt between the two points, and consequently the delay interval at which the bomb will function after first striking water. The gases produced during combustion of the time composition are exhausted into the cavity (6) formed by the body sleeve (11). To seal this cavity against entry of water during taxying and whilst immersed before functioning, special sealing washers (27 and 31) are inserted.

Safety Devices:- The arming vane hub is secured against rotating in transit on the ground by a safety pillar fastened to the body of the fuze. There is a cover over the delay setting device. In the carrier, the arming vanes are prevented from rotating by an arming vane stop which is attached to the safety clip.

COPY NO.____

FUZE DATA FILE NO.: 2211.N8

NATIONALITY: BRITISH		INFORMATION DATE: October 1942
DESIGNATION D.A. No. 33 Mark I	PRINCIPAL MARKING	D.A. No. 33 Mark I
	CLASSIFICATION	Mechanical Nose Impact
	TYPE OF MISSILE	Fragmentation and General Purpose
MARKINGS AND SUBSIDIARY MARKINGS:		BOMBS USED IN: This fuze is for use in the bombs, Parachute, H.E. 20 lb. Fragmentation and 40 lb. G.P.

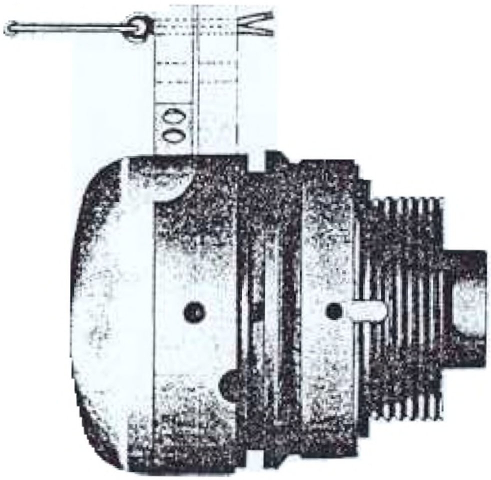

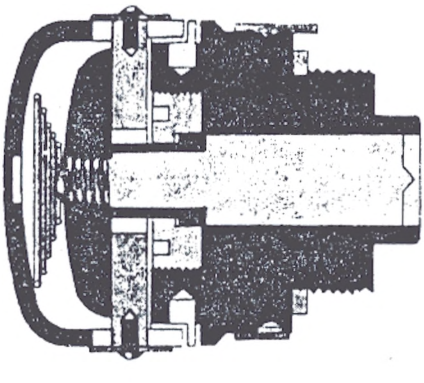

COPY NO. 2038

FUZE DATA

FILE NO.: 2211.N8

NATIONALITY: BRITISH		INFORMATION DATE: October 1942
DESIGNATION	PRINCIPAL MARKING	D.A. No. 33 Mark I
D.A. No. 33 Mark I	CLASSIFICATION	Mechanical Nose Impact
	TYPE OF MISSILE	Fragmentation and General Purpose
MARKINGS AND SUBSIDIARY MARKINGS:		BOMBS USED IN: This fuze is for use in the bombs, Parachute, H.E. 20 lb. Fragmentation and 40 lb. G.P.

	DATA	
1	COLOR	
2	OVERALL LENGTH	
3	OVERALL WIDTH	
4	MATERIAL OF CONSTRUCTION	
5	DESCRIPTION	This fuze is similar in principal to the No. 29 Mark I Fuse except that, in place of a shear wire, a shear washer and striker sleeve are embodied within the body. A spring safety clip retains a modified safety cap in position in place of the safety fork. The locking device for securing the fuze to the bomb is also identical with the No. 29 Mark I Fuze. A safety pin, carrying an instruction tag, passes through holes in the projections attached to the safety clip. Holes are also provided for the insertion of the split pin at the end of the arming link of the parachute bomb. Safety Devices:- During transit, the pressure plate is held in position by the spring safety clip. The clip is held together by a safety pin fitted through the two ends. After being placed in the carrier, the arming link pin from the parachute is put in place and the safety pin is then removed. A shear washer is also employed to prevent the striker from being moved.
6	POSITION AND METHOD OF FIXING IN BOMB	Screwed into the exploder adapter tube at the nose of the bomb and secured by a spring locking collar.
7	FUZES LIKELY TO BE FOUND WITH	None.
8	COMPONENTS OF EXPLOSIVE TRAIN	Has individual exploder tube at nose containing the detonator and exploder charge.
9	ARMING TIME	
10	OPERATION	On release from the carrier, the arming link pin is pulled clear by the action of the parachute. With the release of the safety spring clip, the safety cap is forced off by action of the spring and the fuze is armed. On impact, the pressure plate shears the washer and the striker moves inwards and pierces the primer. When used on bombs without parachutes, 20 lb. "F" and 40 lb. "G.P.", safety pin and spring clip are removed as safety cap is held by walls of bomb container.
11	REMARKS	1. This fuze has no vanes. There is a spring operated cap which fits around the pressure plate. 2. This fuze may also act as a nose plug during transit.

COPY NO.________

FUZE DATA

FILE NO.: 2211.T3

NATIONALITY:	BRITISH	INFORMATION DATE:	October 1942
DESIGNATION (A) No. 21 Mark I or II (B) No. 22 Mark I or II	PRINCIPAL MARKING	(A) No. 21 Mark I or II (B) No. 22 Mark I or II	
	CLASSIFICATION	Mechanical Tail Impact	
	TYPE OF MISSILE	H.E. Aircraft Bombs	
MARKINGS AND SUBSIDIARY MARKINGS:		BOMBS USED IN: (A) 50 lb. G.P. Mark I and 120 lb. G.P. Mark I. (B) 250 lb. G.P. Mark I and 500 lb. G.P. Mark I.	

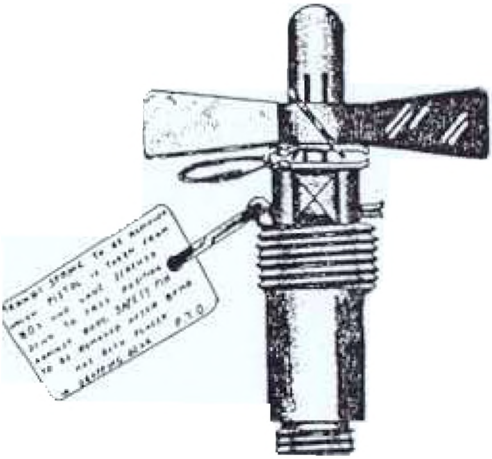

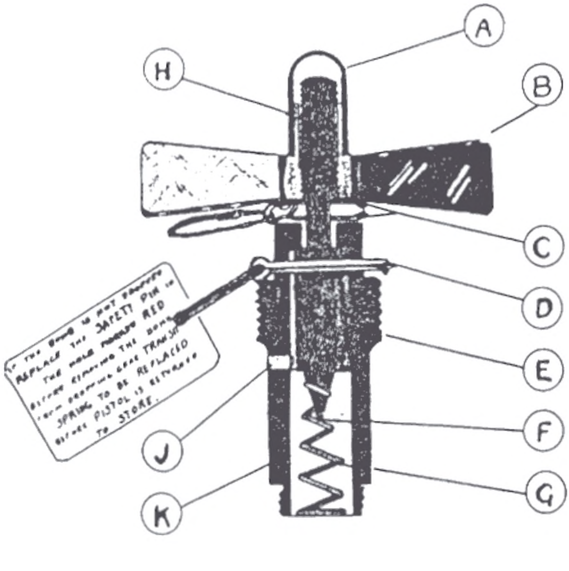

COPY NO. 2 38

FILE NO.: 2211.T1

NATIONALITY: BRITISH		INFORMATION DATE: October 1942
DESIGNATION (A) No. 5B Mark I (B) No. 5B Mark II (C) No. 23 Mark I/A/	PRINCIPAL MARKING	(A) No. 5B Mark I (B) No. 5B Mark II (C) No. 23 Mark I/A/
	CLASSIFICATION	Mechanical Tail Impact
	TYPE OF MISSILE	(A) & (B) - Aircraft H.E. Bombs (C) - Smoke-float, Aircraft, Navigation Mark I
MARKINGS AND SUBSIDIARY MARKINGS:		BOMBS USED IN: (A) & (B) - All H.E. bombs except 20 lb. Mark I, all G.P. Mark I and S.M. Mark II bombs. (C) - Smoke-float, Aircraft, Navigation Mark I

	DATA	(A)	(B)	(C)
1	COLOR	Brass	Brass	Aluminum
2	OVERALL LENGTH (less booster)	3.9 inches	4.0 inches	3.7 inches
3	OVERALL WIDTH	Body - 1.1 inches Vanes - 4.6 inches		Body - 0.8 inch Vanes- 3.5 inches
4	MATERIAL OF CONSTRUCTION	Brass body, steel striker coppered over to prevent rusting; copper safety pin.		Aluminum body.

5 DESCRIPTION These fuzes consist of a body (H) threaded externally with a 1.1 inch standard thread which has two spanner flats formed above the threads. The lower end of the body is threaded externally for the exploder. This fuze has a steel striker pellet (G), coppered over to prevent rusting, with three grooves formed in it which act as air release passages when the striker is moved. A fourth and deeper groove is formed longitudinally on the striker body in which a grub screw (J) engages, preventing the striker pellet from rotating. The arming vanes (C) consist of two blades soldered to the arming vane nut (D). The outer end of this nut is covered with an arming vane cap (A) made of light pressed brass which is removed before the fuze is used. The arming vane nut stop (E) prevents the arming vane assembly from jamming against the body.

Safety Devices:- The safety pin (F) is made of copper and has an instructional tag attached. The striker pellet spring (L) is a light coil spring with the inner end fitting into a hole in the striker. During flight, the arming vanes (C) are prevented from rotating by a stop on the bomb carrier. The red ring (B) on the striker pellet (G) indicates that the fuze is not armed.

		(A) & (B)	(C)
6	POSITION AND METHOD OF FIXING IN BOMB	Screwed into exploder tube at tail of bomb using spanner wrench on flats.	Screwed into float at tail by lower threads.
7	FUZES LIKELY TO BE FOUND WITH	Nose: D.A. No. 8 Mark I, D.A. No. 19 Mark I or II, D.A. No. 9 Mark I and D.A. No. 20 Mark I, II or III.	None
8	COMPONENTS OF EXPLOSIVE TRAIN	Can be fitted with either instantaneous or short delay components.	Detonator in turn fires powder train.
9	ARMING TIME		

10 REMARKS 1. The No. 5B Mark II is identical to the tail fuze No. 5B Mark I except for the transit spring, horseshoe in shape and double (E) which is interposed between the outer end of the body and the arming vane nut. This secures the arming vane against loss during transit.

2. The No. 23 Mark I/A/ is similar in construction to Fuze, Bomb, Tail, No. 5B Mark II, the same type of transit spring and striker pellet being used. It differs from the No. 5B Tail Fuze in the following respects: (a) The body is of aluminum; (b) There is no body thread and the pistol is screwed into the float by the lower thread to which the exploder or relay is attached on the No. 5B Tail Fuse; and (c) The two arming vanes are each secured to the arming vane cup by two screws.

COPY NO.___

FUZE DATA

FILE NO.: 2211.T2

NATIONALITY: BRITISH		INFORMATION DATE: October 1942
DESIGNATION	PRINCIPAL MARKING	No. 12 Mark I
No. 12 Mark I	CLASSIFICATION	Mechanical Tail Impact
	TYPE OF MISSILE	Used only in tail of Bomb, Aircraft, H.E.S.N. Mark II

MARKINGS AND SUBSIDIARY MARKINGS:	BOMBS USED IN: Used only in tail of Bomb, Aircraft, H.E.S.N. Mark II

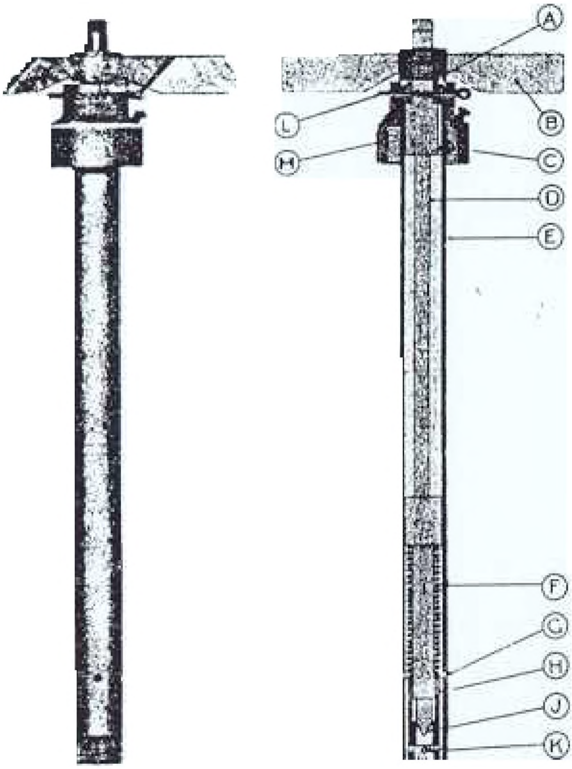

COPY NO. 2638

FUZE DATA

FILE NO.: 2211.T2

INFORMATION DATE: October 1942

DESIGNATION	PRINCIPAL MARKING	..
No. 12 Mark I	CLASSIFICATION	
	TYPE OF MISSILE	

MARKINGS AND SUBSIDIARY MARKINGS:

	DATA	
1	COLOR	Brass.
2	OVERALL LENGTH	20.5 inches (less booster)
3	OVERALL WIDTH	2.0 inches
4	DIAMETER OF VANES	7.5 inches (six blades)
5	MATERIAL OF CONSTRUCTION	Body tube and striker steel. Collar and arming vanes - brass.
6	DESCRIPTION	The fuze consists of a steel tube (E) with the lower portion threaded to screw into adapter of an exploder. A bushing is pressed into lower end of tube to act as guide for striker. There are four gas grooves (H) and gas escape holes (G). The top portion of the tube (E) screws into the brass body collar (M). The brass collar (M) is threaded internally to screw over the central tube of the bomb, and to receive the steel tube (E). The collar (M) has a groove cut in its top surface for the head of the arming vanes stop screw (A). The striker rod (D) is made of steel and its lower end terminates in the striker (J). There is a collar about half way up the striker rod (D) which serves as a base for the creep spring (F). The top of the striker rod (D) is threaded to take the arming vanes (B). The arming vanes (B) consist of six cast brass blades, with a stop screw (A) fixed to the under side of the vane boss. Safety Devices:- There is a safety pin (L) which passes through the brass collar (M) and the striker rod (D). The striker rod spring (F), fits between the top of the striker guide bushing and the collar on the striker rod. The arming vanes (B) have a safety pin clip which prevents their rotation and / or loss during the flight of the plane.
7	POSITION AND METHOD OF FIXING IN BOMB	Screwed into the end of the central exploder tube of the bomb and held in place by a set-screw.
8	FUZES LIKELY TO BE FOUND WITH	Nose: No. 13 Mark I.
9	COMPONENTS OF EXPLOSIVE TRAIN	Detonator No. 9 Mark I, Exploder H.E. Bomb 34.8 inches, No. 11 Mark I.
10	ARMING TIME	
11	OPERATION	When the bomb is released from the plane, the fuzing wire is withdrawn. This removes the safety pin clip and the arming vanes are then unscrewed by the action of the air. The fuze is then armed and on impact the plunger is carried into the bomb by its own momentum, compressing the spring and allowing the striker to hit the cap in the cartridge head of the detonator.
12	REMARKS	The arming vanes unscrew and fall clear.

FUZE DATA

COPY NO.

FILE NO.: 2211.T5

	INFORMATION DATE: October 1942
	No. 30 Mark I

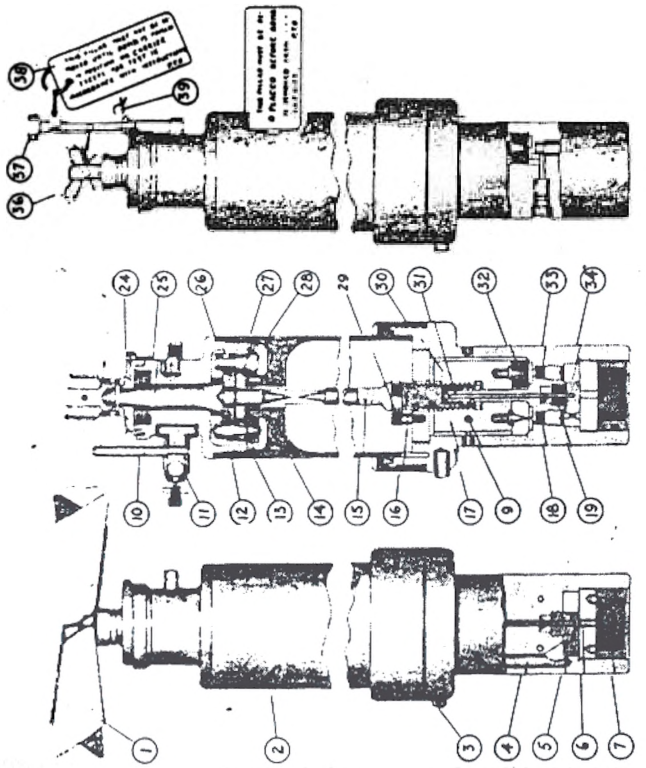

OPERATION When the bomb is released, the vane stop (10) and safety clip (11) remain attached to the carrier and the arming vanes are free to rotate. The arming vanes, working through the reduction gear described (see DESCRIPTION), cause the arming spindle (15) to be slowly drawn upwards out of the inertia weight and through the rotatable gear wheel (27) in which it is a sliding fit. This frees the two inertia pellets (17) and (30) and also withdraws the locking rod (31) until 5 grain detonator (5) is immediately over the stemmed fire channel (6). The shutter is automaticclly locked in this position by a pawl (22) which is actuated by spring (23) and the fuze is now armed.

On impact, the long delay mechanism will always work, while the short delay will not operate unless certain armored structures are hit. The flash from the cap on detonator ignites a delay fitting, this in turn firing a 5 grain detonator which fires the magazine.

FUZE DATA

COPY NO. 2638

FILE NO.: 2211.T3

NATIONALITY: BRITISH		INFORMATION DATE: October 1942
DESIGNATION (A) No. 21 Mark I or II (B) No. 22 Mark I or II	PRINCIPAL MARKING	(A) No. 21 Mark I or II (B) No. 22 Mark I or II
	CLASSIFICATION	Mechanical Tail Impact
	TYPE OF MISSILE	H.E. Aircraft Bombs
MARKINGS AND SUBSIDIARY MARKINGS:		BOMBS USED IN: (A) 50 lb. G.P. Mark I and 120 lb. G.P. Mark I. (B) 250 lb. G.P. Mark I and 500 lb. G.P. Mark I.

	DATA	No. 21 Mark I or II	No. 22 Mark I or II
1	COLOR	Brass	Brass
2	OVERALL LENGTH	4.0 inches	4.0 inches
3	OVERALL WIDTH	Body - 1.1 inches Vanes- 3.25 inches	Body - 1.1 inches Vanes- 5.15 inches
4	MATERIAL OF CONSTRUCTION	Brass body, steel stri r, and copper safety pin.	
5	DESCRIPTION	These fuzes consist of a brass body (K) with 1.1 inch standard thread. There are two spanner flats on the body above the threads, and the lower end is threaded to screw into the exploder. The steel striker pellet (E), coppered over to prevent rusting, has three grooves formed in it which allow air to escape into the body when the striker moves forward. A fourth groove, formed longitudinally on striker pellet, into which a grub screw (J) is engaged, prevents the striker pellet from rotating. The arming vane assembly consists of a nut (B) to which are soldered four vanes. The arming vane cap (A) is made of light pressed brass, and is placed over the arming vane nut which is removed before the fuze is used. Safety Devices:- Transit spring (C), horseshoe in shape, fits between the fuze body and the arming vane nut, securing the arming vanes during transit. This spring is removed before the fuze is placed in the bomb. The arming vanes are kept from rotating during transit in the plane by a stop in the bomb carrier. The safety pin (D) is replaced by the fuzing wire after the bomb is placed in the carrier. The striker pellet spring (G) or creep spring, fits between the body of the striker and the detonator, keeping it in position except when impact occurs. A red ring (H) can be seen when fuze is not in armed position.	
6	POSITION AND METHOD OF FIXING IN BOMB	Screwed into exploder tube at tail of bomb, using spanner wrench on flats.	Screwed into tail adapter, using spanner wrench on flats.
7	FUZES LIKELY TO BE FOUND WITH	Nose: D.A. No. 19 Mark I or II	
8	COMPONENTS OF EXPLOSIVE TRAIN	May be fitted with either instantaneous or short delay components.	
9	ARMING TIME		
10	OPERATION	When the bomb is released from the carrier, the fuzing wire is withdrawn and the arming vanes are freed. After the vanes have unscrewed completely, the fuse is armed. On impact, the striker moves forward from its own inertia force, compressing the striker pellet spring and in turn striking the cap in cartridge head of the detonator.	
11	REMARKS	1. Pistol (Fuze) Aircraft Bomb, Tail, No. 21 Mark I, is a conversion of old stocks of Pistol Aircraft Bomb, Tail, No. 5B, Mark I. Differences occur in the number of blades of the arming vanes and their diameter. 2. Pistol (Fuze) Aircraft Bomb, Tail, No. 21 Mark II. is of new manufacture and is identical in all respects with the Mark I Pistol. 3. Pistol Aircraft Bomb, Tail, No. 22 Mark II, is of new manufacture and is identical in all respects with the Mark I Pistol.	

COPY NO.

FUZE DATA FILE NO.: 2211.T4

NATIONALITY: BRITISH		INFORMATION DATE: October 1942
DESIGNATION (A) No. 28 Mark I (B) No. 28 Mark II	PRINCIPAL MARKING	(A) No. 28 Mark I (B) No. 28 Mark II
	CLASSIFICATION	Mechanical Tail Impact
	TYPE OF MISSILE	(A) H.E. - G.P. Bombs (B) G.P. & S.A.P. Bombs

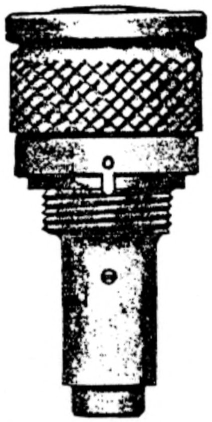

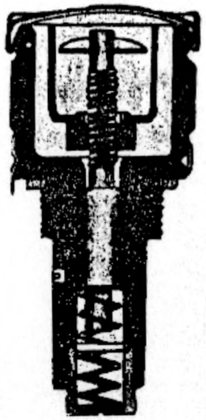

OPERATION

As the arming vanes (See Remarks) rotate, this motion is transmitted to the fork screwed into the striker by means of the arming vane spindle. After the fork has unscrewed, the striker is free to move but is held in position by the creep spring. On impact, the striker overcomes the inertia of the creep spring and moves forward, piercing the primer.

COPY NO.

FUZE DATA FILE NO.: 2211.T4

NATIONALITY: BRITISH		INFORMATION DATE: October 1942
DESIGNATION (A) No. 28 Mark 1 (B) No. 28 Mark II	PRINCIPAL MARKING	(A) No. 28 Mark I (B) No. 28 Mark II
	CLASSIFICATION	Mechanical Tail Impact
	TYPE OF MISSILE	(A) H.E. - G.P. Bombs (B) G.P. & S.A.P. Bombs
MARKINGS AND SUBSIDIARY MARKINGS:		BOMBS USED IN: (A) In the tail of: 250 lb. G.P. Mark IV 500 lb. G.P. Mark IV (B) In the tail of: 250 lb. & 500 lb. G.P. Mark IV 250 lb. & 500 lb. SAP. Mark V

	DATA	No. 28 Mark I and No. 28 Mark II
1	COLOR	
2	OVERALL LENGTH	4.0 inches (less booster)
3	OVERALL WIDTH	1.9 inches
4	MATERIAL OF CONSTRUCTION	
5	the sists the pendently the pistol body	
6	POSITION AND METHOD OF FIXING IN BOMB	Screwed by hand into exploder tube adapter in base of bomb and secured by a spring locking collar.
7	FUZES LIKELY TO BE FOUND WITH	**Nose: No. 27 Mark I**
8	COMPONENTS OF EXPLOSIVE TRAIN	Individual exploder tube at base plate, containing detonator and exploder.
9	ARMING TIME	

10 **REMARKS** 1. The No. 28 fuze is similar in principle to the No. 58 fuze except that it is fitted with a locking device and is not fitted with an arming vane.

2. These fuzes are not fitted with arming vanes as the vanes are a part of the tail unit of the bomb. In place of the vanes, these fuzes are fitted with a fork which screws on the striker thread. When engaged and rotated by the corresponding fork on the arming vane spindle in the tail unit, it unscrews and the striker is free to function on impact.

FUZE DATA

FILE NO.: COPY NO.. 2211.T7

		INFORMATION DATE: October 1942
DESIGNATION No. 34 Mark I	PRINCIPAL MARKING	No. 34 Mark I
	CLASSIFICATION	Mechanical Tail Impact
	TYPE OF MISSILE	450 lb. A.P. Mark II bombs

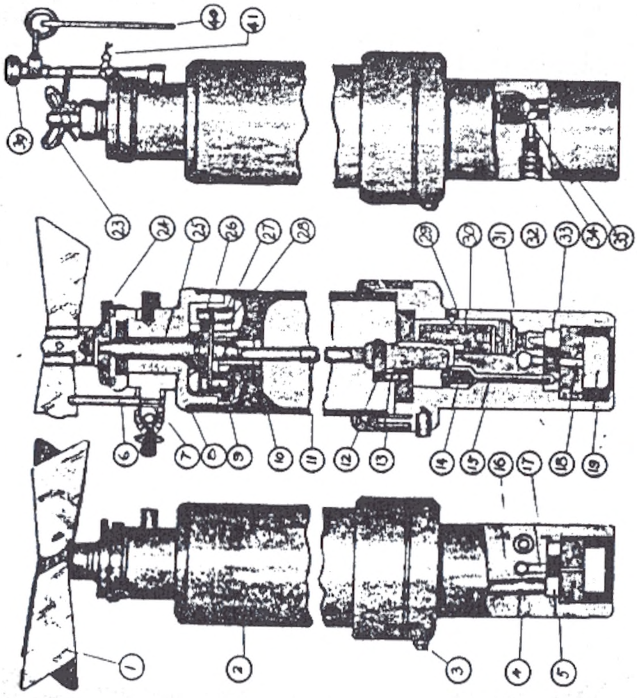

REMARKS

1. Used in Bombs for attacking surface ceaft.

2. The fuze includes a delay fitting to give one fixed period of delay only and a geared arming vane safety mechanism is incorporated to keep the fuze safe for the first 50 feet of free flight when released at an air speed of 100 m.p.h., but just to permit functioning in 300 feet at that speed.

3. The fuze is capanle of being dropped safe in an emergency. This is achieved in the usual way by releasing the bomb while the fuzing rod of the carrier is in the SAFE position.

4. The fuze is not capable of giving direct action.

COPY NO. 38

FUZE DATA — FILE NO. 2211.T5

		INFORMATION DATE: October 1942
		No. 30 Mark I
	CLASSIFICATION	Mechanical Tail Time
	TYPE OF MISSILE	S.A.P. - H.E. Bombs
MARKINGS AND SUBSIDIARY MARKINGS:		BOMBS USED IN: 250 lb. S.A.P. Mark II 500 lb. S.A.P. Mark II

	DATA	No. 30 Mark I
1	COLOR	
2	OVERALL LENGTH	
3	OVERALL WIDTH	
4	MATERIAL OF CONSTRUCTION	

DESCRIPTION

This fuse consists of a body in which are housed the arming and delay assemblies. The arming assembly is fitted into upper end of fuse body and involves a system of reduction gears wherein the teeth of the pinion (13) on the lower end of the arming vane spindle (25) engage with the teeth of two other gears (14) and (27). This assembly gives a ratio of 60 turns of the arming vanes for one turn of the arming spindle (15) which is being screwed out of inertia weights. The arming vane mechanism is prevented from jamming by stop pins (16) and (29).

The delay assembly consists of a long and a short delay mechanism, the long delay consisting of an inertia pellet being held away from the cap only by a creep spring in order that, on slight impact, the weight would compress the spring and detonate the cap.

The short delay mechanism also has an inertia weight, but a shear wire prevents it from moving down. This mechanism is so designed that the bomb must strike a one inch mild steel plate at a velocity of 500 feet per second before wire will be sheared to allow inertia weight to detonate the cap.

Safety Devices:- Safety pillar (38) and safety wires (36) and (39) make the fuse safe for transit. These are removed before bomb is placed in carrier. Arming vane stop (10) and safety clip (11) keep the arming vanes from rotating during flight.

6	POSITION AND METHOD OF FIXING IN BOMB	Held in place in tail by locating pin and locking ring.
7	FUZES LIKELY TO BE FOUND WITH	
8	COMPONENTS OF EXPLOSIVE TRAIN	
9	ARMING TIME	(See REMARKS)

10 **REMARKS**

1. The fuze is used in bombs for attacking surface craft.
2. The fuze includes both long and short delay mechanisms, also a geared arming vane safety mechanism which is designed to keep the fuse safe for the first 50 feet of free flight when released at an air speed of 100 miles per hour, but just to permit functioning in 300 feet at that speed.
3. The fuze is capable of being dropped safe in an emergency. This is achieved in the usual way by releasing the bomb while the fuzing rod of the carrier is in SAFE position.
4. The fuze is not capable of giving direct action.

COPY NO.

FUZE DATA

FILE NO.: 2211.T6

NATIONALITY: BRITISH		INFORMATION DATE: October 1942
DESIGNATION (A) No. 30 Mark II or III (B) No. 37 Mark I	PRINCIPAL MARKING	(A) No. 30 Mark II or III (B) No. 37 Mark I
	CLASSIFICATION	Mechanical Tail Impact
	TYPE OF MISSILE	(A) A.S.-H.E. Bombs (B) A.P.-H.E. Bombs
MARKINGS AND SUBSIDIARY MARKINGS:		BOMBS USED IN: (A) Bomb H.E. Aircraft A.S. 100 lb. Mark IV Bomb H.E. Aircraft A.S. 250 lb. Mark IV Bomb H.E. Aircraft A.S. 500 lb. Mark IV (B) 2000 lb. A.P. Bombs

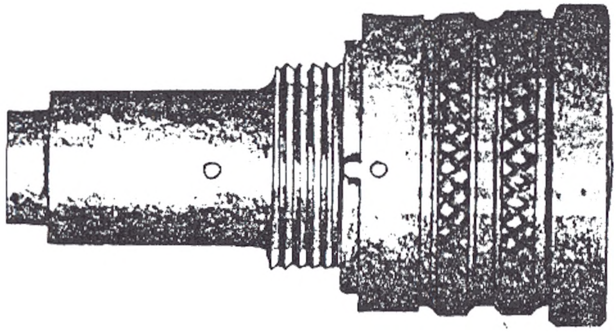

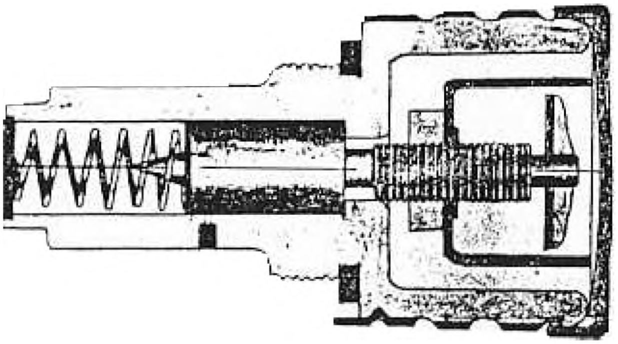

COPY NO. ~~2638~~

FUZE DATA FILE NO.: 2211.T6

NATIONALITY: BRITISH		INFORMATION DATE: October 1942
DESIGNATION (A) No. 30 Mark II or III (B) No. 37 Mark I	PRINCIPAL MARKING	(A) No. 30 Mark II or III (B) No. 37 Mark I
	CLASSIFICATION	Mechanical Tail Impact
	TYPE OF MISSILE	(A) A.S.-H.E. Bombs (B) A.P.-H.E. Bombs
MARKINGS AND SUBSIDIARY MARKINGS:		BOMBS USED IN: (A) Bomb H.E. Aircraft A.S. 100 lb. Mark IV Bomb H.E. Aircraft A.S. 250 lb. Mark IV Bomb H.E. Aircraft A.S. 500 lb. Mark IV (B) 2000 lb. A.P. Bombs

	DATA	No. 30 Mark II or III	No. 37 Mark I
1	COLOR		
2	OVERALL LENGTH (less booster)	4.0 inches	4.0 inches
3	OVERALL WIDTH	2.0 inches	2.0 inches
4	MATERIAL OF CONSTRUCTION		
5	DESCRIPTION	The fuzes No. 30 Mark II or III are similar in construction to Fuze No. 28 Mark I except that the strikers are fitted with a sharp point. The Mark III differs from the Mark II in the method of retaining the creep spring within the body. In the Mark II Fuze the spring is held in position by a washer, the washer being retained by spinning over the end of the fuze body. In the Mark III Fuze, the creep spring is retained by a screwed holder. An arming vane is not fitted with this fuze, but forms part of the tail unit of the bomb, such as the A.S. 100 lb., 250 lb. and 500 lb. bombs. The fuze is fitted with a fork running on the striker thread. Safety Devices:- The fork is prevented from rotating during transit by a safety plate which passes through it and engages slots in the fuze body. A press cap fitting over the end of the fuze body prevents the entry of dirt and moisture. When completely assembled, the arming vanes, connected to the fuze by the arming vane spindle, are prevented from rotating by the fuzing wire.	
6	POSITION AND METHOD OF FIXING IN BOMB	Screwed by hand into exploder tube adapter in base plate of bomb and secured by a spring locking collar.	In base plate of bomb.
7	FUZES LIKELY TO BE FOUND WITH	None	None.
8	COMPONENTS OF EXPLOSIVE TRAIN	Individual exploder tube.	Individual exploder tube.
9	ARMING TIME		
10	OPERATION	As the bomb leaves the plane, the fuzing wire is withdrawn from the arming vanes, and they are then free to rotate. After the fork has unscrewed, the fuze is then armed. On impact, the striker overcomes the tension of the creep spring and moves forward.	
11	REMARKS	1. Fuzes No. 30 Mark II and III are similar in construction to Fuze No. 28 Mark I. 2. The No. 37 Mark I Fuze is similar in construction and operation to the No. 30 Mark III. It differs only in length and in the construction of the arming spindle, which has two universal joints due to its added length.	

FUZE DATA

COPY NO.________

FILE NO.: 2214.N2

NATIONALITY: BRITISH		INFORMATION DATE: October 1942
DESIGNATION No. 35 Mark I or Mark II	PRINCIPAL MARKING	No. 35 Mark I or Mark II
	CLASSIFICATION	Mechanical Nose Pyrotechnic
	TYPE OF MISSILE	Flare

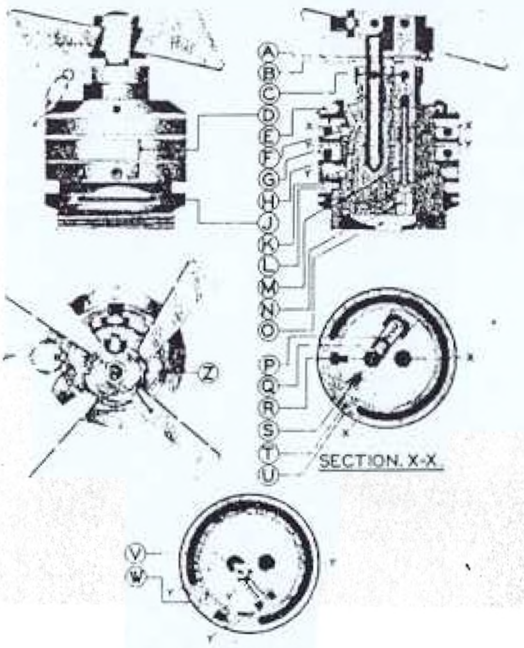

SECTION. X-X.

SECTION. Y-Y.

OPERATION When the flare is released, the firing plug (23) is withdrawn from the retaining plug (22) by the fuze setting link which remains attached to the carrier. Withdrawal of the firing plug causes the striker (21) to be drawn back against its spring until the 2 balls (25) are clear of the retaining plug. The balls then fall outwards, freeing the striker and allowing it to move forward under the action of its spring to fire the detonator (26). The flash from the detonator ignites the powder pellet (27) which blows out the brass escape hole disc, allowing flash to pass through a hole (20) in the body of the fuze; this ignites the fuze composition in the lower groove (13) of the time ring, which burns in a clockwise direction. After the safety delay period, the powder pellet (17) communicating with upper groove (12) is ignited and its flash blows out the escape hole strip (18) igniting the fuze composition in the upper groove (12), which burns around in a counter-clockwise direction. After an interval of time determined by the position of the setting ring (8), the powder pellets (9) in the setting ring are fired, the flash passing around the annular groove to ignite the powder pellet (7) in the spigot (4). The flash from these pellets passes down the firing channels (14) and (15) and ignites the contents of the magazine (31). When the setting ring (8) is in the SAFE position, the powder pellets (9) are masked and cannot be ignited by the burning composition in the upper groove (12) of the fixed ring. Thus the fuze will be blind if it is set in the SAFE position when the flare is dropped, even though the aircraft fuze setting control is moved to LIVE.

2638

COPY NO.

FUZE DATA — FILE NO.: 2211.T7

NATIONALITY: BRITISH		INFORMATION DATE: October 1942
DESIGNATION No. 34 Mark I	PRINCIPAL MARKING	No. 34 Mark I
	CLASSIFICATION	Mechanical Tail Impact
	TYPE OF MISSILE	450 lb. A.P. Mark II bombs
MARKINGS AND SUBSIDIARY MARKINGS:		BOMBS USED IN: This tail fuze will usually be found in the 450 lb. A.P. Mark II bomb.

	DATA	No. 34 Mark I
1	COLOR	
2	OVERALL LENGTH	
3	OVERALL WIDTH	
4	MATERIAL OF CONSTRUCTION	

5 DESCRIPTION

This fuze consists of an arming vane mechanism, arming spindle, and delay mechanism. The arming mechanism consists of arming vanes (1) attached to an arming spindle (25) which drives a gear train (9), (10) and (28). This gear reduction turns the arming spindle which frees the inertia pellet (30) and allows the shutter locking rod (15) to move, placing the detonator in position.

Safety Devices:- Lead seal wire (41), whipcord becket (23) and safety pillar (39) make the fuze safe for transit. They are removed before the fuze is assembled to the bomb. The vane stop (6) and safety clip (7) keep the arming vanes from rotating during flight.

6	POSITION AND METHOD OF FIXING IN BOMB	Held in place in tail by locating pin and locking ring.
7	FUZES LIKELY TO BE FOUND WITH	
8	COMPONENTS OF EXPLOSIVE TRAIN	
9	ARMING TIME	

OPERATION

When the bomb is released, the arming vane is freed from the arming vane stop (6) which is attached to the safety clip (7), rotates and, working through the reduction gear, causes the arming spindle (11) to be slowly drawn towards the arming vane end of the fuze. This frees the inertia pellet (30), and also allows the shutter locking rod (15) to lift under the influence of the spring (14), thus releasing the shutter (33). The shutter then moves across the fuze under the action of its spring (21) until the detonator (5) is immediately over the stemmed fire channel (18). The shutter is automatically locked in this position by a pawl (37), which is actuated by spring (22), the pawl in its turn being locked by a spring actuated plunger (38). This fuze is now said to be "Armed".

The delay mechanism consists of the inertia pellet (30), creep spring (31), detonator (32), delay fitting (34) and powder pellet (16). The mechanism cannot function until the inertia pellet has been released by rotation of the arming spindle (11). The mechanism is designed to function by the deceleration of the bomb. The arming spindle having been withdrawn, the inertia pellet remains supported only by a light creep spring. Deceleration of the bomb will now cause the pellet to set forward onto the detonator (32), which will be pierced and fired by the needle. The flash from this detonator passes through the channel (35) to the delay fitting (34) and from there through a channel (36) filled with loose gunpowder to the pressed powder pellet (16). The flash from this pellet passes through a channel (17) to the detonator (5), which is by this time in the central position over the fire channel (18). When the detonator (5) fires, it causes detonation of the magazine filling (19).

COPY NO.

FUZE DATA

FILE NO. 2214.N1

NATIONALITY: BRITISH		INFORMATION DATE: October 1942
DESIGNATION (A) No. 28 Mark I/A/ (B) No. 28A Mark II (C) No. 28D Mark II	PRINCIPAL MARKING	(A) No. 28 Mark I/A/ (B) No. 28A Mark II (C) No. 28D Mark II
	CLASSIFICATION	Pyrotechnic Nose Time
	TYPE OF MISSILE	Flare

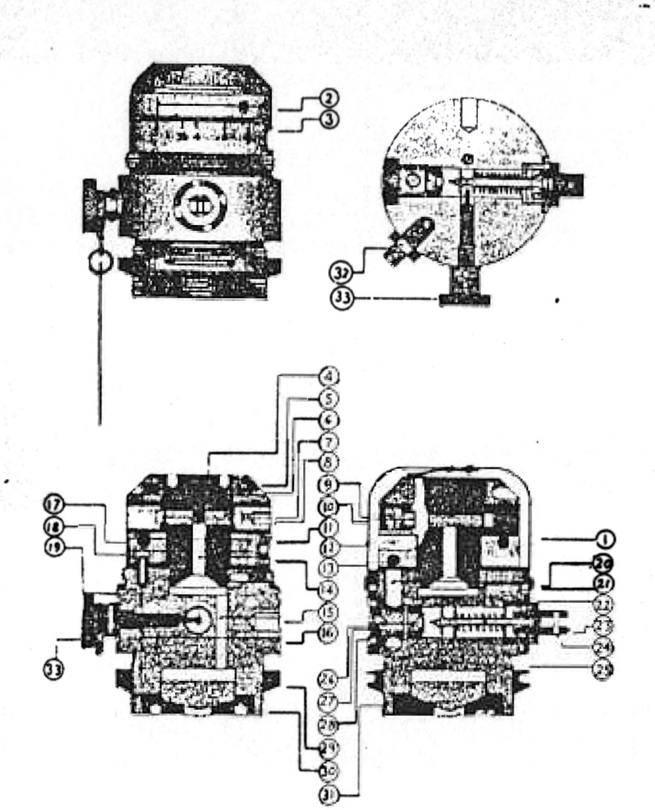

OPERATION

When the flare is dropped from the plane, the arming rod (Q) is withdrawn, freeing the spring loaded detonator holder (P) which moves forward in its channel to impact the striker (S). The flash from the detonator passes through an opening (F) in the fuse body to the upper time ring, in which the direction of burning is counter-clockwise. After a time interval, determined by the prior setting of the lower movable ring in relation to the upper ring, the flash passes down a channel (H) to the lower time ring, in which the direction of burning is clockwise. In the meantime, the arming vanes have rotated, withdrawing the arming stem until the shoulder of the spring loaded valve rod (M) bears against the inner face of the arming stem bushing. The valve is then raised, which permits passage of the flash from the lower time ring to the powder pellet (K). The powder pellet (K) then ignites the magazine pellet (N) through the passage (Y), and (N) then fires the magazine (O).

COPY NO. 2638

FUZE DATA

FILE NO.: 2214.N1

NATIONALITY: BRITISH		INFORMATION DATE: October 1942
DESIGNATION (A) No. 28 Mark I/A/ (B) No. 28A Mark II (C) No. 28D Mark II	PRINCIPAL MARKING	(A) No. 28 Mark I/A/ (B) No. 28A Mark II (C) No. 28D Mark II
	CLASSIFICATION	Pyrotechnic Nose Time
	TYPE OF MISSILE	Flare
MARKINGS AND SUBSIDIARY MARKINGS:		BOMBS USED IN: (A) & (B) - Flare, Aircraft, Reconnaissance, 4 inch, Mark I. (C) - Flare, Aircraft, Reconnaissance, 8 inch. 4 minute, Mark I and II.

	DATA	(A)	(B)	(C)
1	COLOR			
2	OVERALL LENGTH			
3	OVERALL WIDTH		Vanes 4.3 inches	Vanes 6.9 inches
4	MATERIAL OF CONSTRUCTION			
5	DESCRIPTION	The fuze consists of a body containing a mechanism for igniting time rings; a valve mechanism for preventing premature action; a magazine for igniting the ejection charge of the flare; and, around the stem of the fuze, two time rings, one of which is capable of being rotated for setting purposes. Safety Devices:- The arming rod (Q) is retained in SAFE position by spring loaded ball (V), thus preventing the arming vane spindle from rotating until the flare is released from the carrier. The safety pin (C) prevents the arming vane spindle and firing rod from moving during transit. The valve (M) prevents the fuse from functioning until the flare has dropped a safe distance below the aircraft. The setting of the time ring to SAFE, thus masking the pellet (K), also prevents the fuze from functioning.		
6	POSITION AND METHOD OF FIXING IN BOMB	Screwed into nose and secured by a locking ring.		
7	FUZES LIKELY TO BE FOUND WITH	None.	None.	None.
8	COMPONENTS OF EXPLOSIVE TRAIN			
9	ARMING TIME			
10	REMARKS	1. The No. 28A and No. 28D fuzes differ from each other only in respect of the size of their arming vanes. 2. The No. 28A and No. 28D fuzes differ from the No. 28 Mark I/A/ in the following constructional details:- (a) A retaining plate is fitted on the top of the body against which the threads of the arming vane spindle engage, when the valve has been lifted from its seating. This ensures the valve assembly being held in positive engagement with the fuze body. (b) Although the minimum possible setting is 4, which is limited by a stop, no setting below 7 is to be employed owing to the risk of blinds.		

COPY NO. 2638

FUZE DATA

FILE NO.: 2214.N2

NATIONALITY: BRITISH		INFORMATION DATE: October 1942
DESIGNATION No. 35 Mark I or II	PRINCIPAL MARKING	No. 35 Mark I or Mark II
	CLASSIFICATION	Mechanical Nose Pyrotechnic
	TYPE OF MISSILE	Flare
MARKINGS AND SUBSIDIARY MARKINGS:		BOMBS USED IN: This fuze is for use in flares.

1	COLOR	
2	OVERALL LENGTH	
3	OVERALL WIDTH	
4	MATERIAL OF CONSTRUCTION	

5 DESCRIPTION This fuse consists of a time ring containing two grooves of pressed fuze composition, a rotatable setting ring, used to set the desired delay period, a mechanism for igniting the train of fuze composition, and a magazine for igniting the ejection charge of the flare. The time ring, which is mounted on a spigot screwed into the upper portion of the fuse body, is graduated from 3½ to 17, each graduation representing the burning for approximately one second of the delay composition; a red pointer marked SAFE is also engraved on the ring. When the setting ring is turned to SAFE, the powder pellets (9) are completely masked.

The position of safety or a particular delay period may be set by making the red arrow engraved on the rotatable setting ring correspond with the proper marking or graduation on the time ring.

The mechanism for igniting the train of fuze composition consists of a spring loaded striker (21) and a 1.7 grain detonator pellet (26). Two steel balls (25) are located in holes in a firing plug (23) which is fitted over the outer end of the striker. These balls engage in a groove in the striker and prevent it from moving forward onto the detonator until the firing plug is withdrawn and the balls freed. The striker and firing plug assemblage are retained in the SAFE position by a safety pin (33) which is screwed into the fuze body and engages in a groove between the two flanges at the head of the striker. A closing plug (32) is screwed into a blind hole in the fuze body. The safety pin is unscrewed after the flare is attached to the plane, and the closing plug is screwed into the hole vacated by the safety pin to exclude moisture.

6	POSITION AND METHOD OF FIXING IN BOMB	Screwed into the nose and secured by a locking ring.
7	FUZES LIKELY TO BE FOUND WITH	None
8	COMPONENTS OF EXPLOSIVE TRAIN	
9	ARMING TIME	

10 REMARKS:

1. The No. 35 Mark I fuze is intended primarily for use as an alternative to fuze, time, aircraft flare, nose, No. 28A, B or D.
2. It differs from Fuze No. 28 Mark II A, B or D mainly with respect to the safety devices and waterproofing arrangements.
3. The necessary period of safety, after the release of the flare, is ensured by a fixed minimum time of delay, 3½ seconds; the maximum setting is 17 seconds. No arming vane mechanism is included.
4. The fuze is capable of being dropped safe in an emergency. This is achieved in the usual way, by releasing the flare while the airplane cockpit fuze setting control is in the SAFE position.
5. The No. 35 Mark I fuze is obsolete.
6. The No. 35 Mark II is similar in design and use to the No. 35 Mark I except that the time rings are filled with a powder having a slower rate of burning, so that a longer maximum delay is obtained.
7. The graduations on the time ring of the No. 35 Mark II are in terms of hundreds and thousands of feet drop of the 4.5 inch reconnaissance flare, on the assumption that the fuze is set so that the flare will function at a height of 3000 feet above sea level. Tables of fuze settings are, therefore, not necessary with this fuze. The fuze admits of a maximum delayed drop of 5500 feet with the 4.5 inch flare.

COPY NO.______

FUZE DATA

FILE NO.: 2233.T1

NATIONALITY: BRITISH		INFORMATION DATE: October 1942
DESIGNATION No. 37 Mark I	PRINCIPAL MARKING	No. 37 Mark I
	CLASSIFICATION	Chemical Tail Long Delay
	TYPE OF MISSILE	G.P. - H.E. and S.A.P. - H.E. Bombs
MARKINGS AND SUBSIDIARY MARKINGS:		BOMBS USED IN: 250 lb. and 500 lb. G.P. Mk. IV 250 lb. and 500 lb. S.A.P. Mk. V

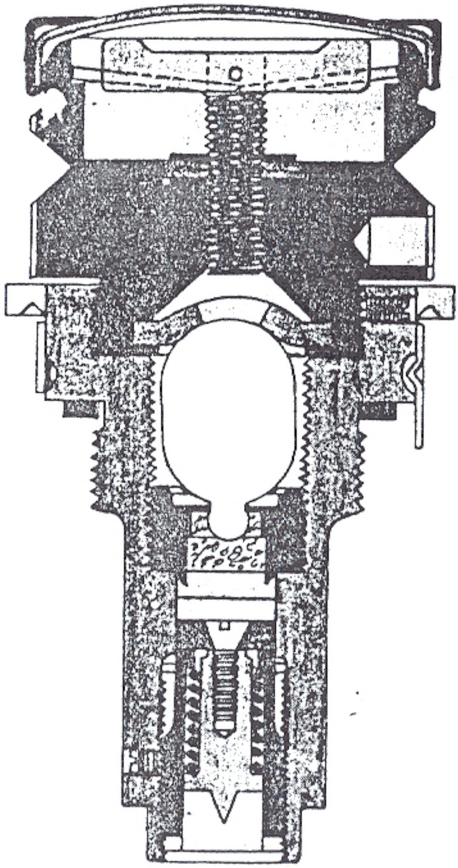

COPY NO. 2638

FUZE DATA

FILE NO.: 2233.71

NATIONALITY: BRITISH		INFORMATION DATE: October 1942	
DESIGNATION No. 37 Mark I	PRINCIPAL MARKING	No. 37 Mark I	
	CLASSIFICATION	Chemical Tail Long Delay	
	TYPE OF MISSILE	G.P. - H.E. and S.A.P. - H.E. Bombs	
MARKINGS AND SUBSIDIARY MARKINGS:		BOMBS USED IN: 250 lb. and 500 lb. G.P. Mk. IV 250 lb. and 500 lb. S.A.P. Mk. V	

	DATA	No. 37 Mark I
1	COLOR	
2	OVERALL LENGTH	4.0 inches (approx.)
3	OVERALL WIDTH	2.0 inches (approx.)
4	MATERIAL OF CONSTRUCTION	
5	DESCRIPTION	The fuze is constructed in two main parts, the head and the body, which are screwed together with washers between them and locked by a locking screw. The upper part, or head, contains the arming screw which is packed with a soft rubber washer. In the body of the fuze is located a vial or ampoule resting on a zinc disc which contains the chemical used in the solution of the celluloid disc in the lower part of the body. A countersunk screw, located in the lower celluloid disc, holds the spring loaded striker in position. Safety Devices:- The fuze is provided with a safety plate and press cap which protects and prevents the arming screw from rotating during transit. A deep V-shaped groove is machined around the head of the fuze, the remaining annulus of metal forming a weak link so that the projecting portion of the head will fracture, should side impact of the bomb occur without damaging the sealing arrangements of the fuze
6	POSITION AND METHOD OF FIXING IN BOMB	Screwed into the adapter in the base plate of bomb and held in position by a spring locking collar.
7	FUZES LIKELY TO BE FOUND WITH	None.
8	COMPONENTS OF EXPLOSIVE TRAIN	Individual exploder tube containing detonator and exploder.
9	ARMING TIME	
10	OPERATION	On release of the bomb, the arming screw of the fuze is screwed down by rotation of the arming vanes, forcing the ampoule against the knife edges of the zinc disc which breaks it open and releases the acetone. In descending, the head of the arming screw screws into the soft rubber washer sealing the acetone in the fuze. The solvent action of the acetone on the celluloid disc or discs continues until the countersunk celluloid disc dissolves, thus allowing the striker to move forward by the action of the striker spring to function the detonator in the bomb
11	REMARKS	Alternative delays are provided by varying the number of celluloid discs used. The following fuzes are used with the time based on Temperature of 60 degrees F: Fuze No. 37D Mark I - 72 hours. Fuze No. 37 Mark I - 6 hours. Fuze No. 37A Mark I - 12 hours. Fuze No. 37B Mark I - 36 hours. Fuze No. 37E Mark I -144 ho[illegible]